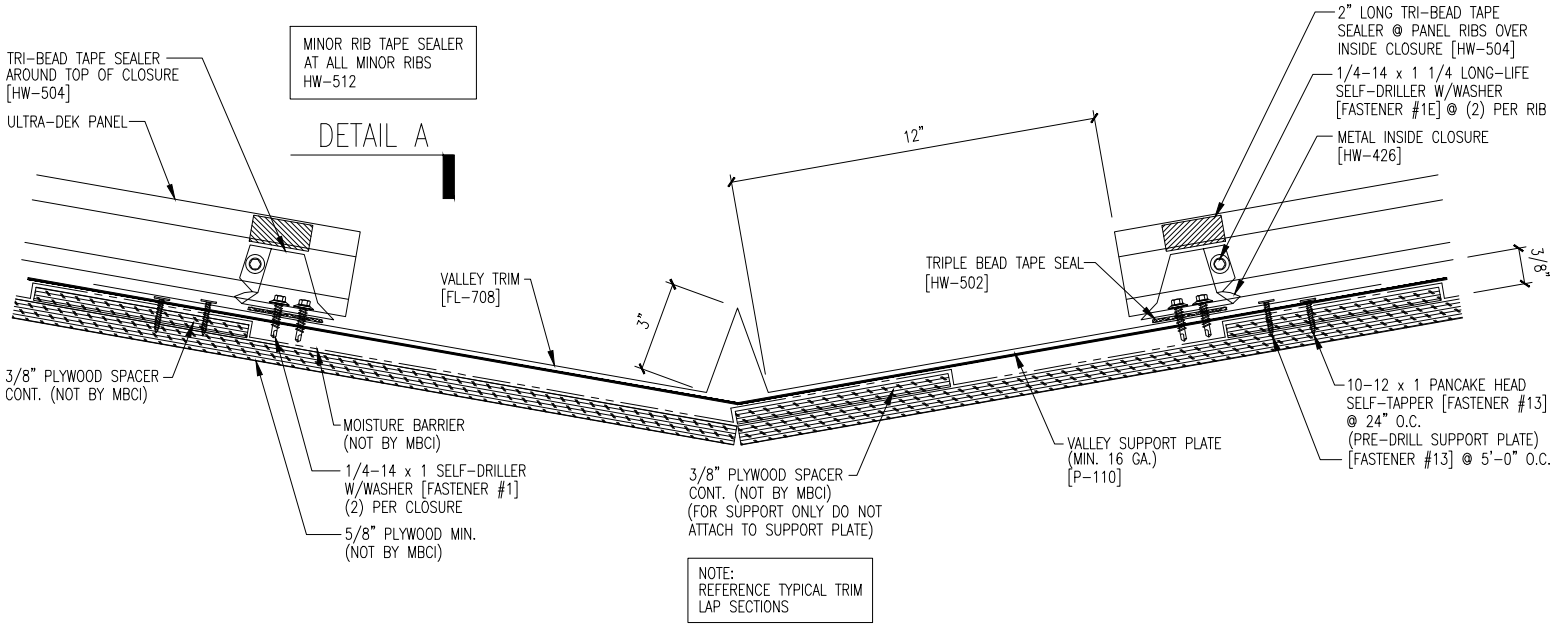
MINOR RIB TAPE SEALER AT ALL MINOR RIBS HW-512
DETAIL A
TRI-BEAD TAPE SEALER AROUND TOP OF CLOSURE [HW-504]
ULTRA-DEK PANEL
VALLEY TRIM [FL-708]
3"
12"
TRIPLE BEAD TAPE SEAL [HW-502]
2" LONG TRI-BEAD TAPE SEALER @ PANEL RIBS OVER INSIDE CLOSURE [HW-504]
1/4-14 x 1 1/4 LONG-LIFE SELF-DRILLER W/WASHER [FASTENER #1E] @ (2) PER RIB
METAL INSIDE CLOSURE [HW-426]
3/8"
3/8" PLYWOOD SPACER CONT. (NOT BY MBCI)
MOISTURE BARRIER (NOT BY MBCI)
1/4-14 x 1 SELF-DRILLER W/WASHER [FASTENER #1] (2) PER CLOSURE
5/8" PLYWOOD MIN. (NOT BY MBCI)
3/8" PLYWOOD SPACER CONT. (NOT BY MBCI) (FOR SUPPORT ONLY DO NOT ATTACH TO SUPPORT PLATE)
VALLEY SUPPORT PLATE (MIN. 16 GA.) [P-110]
10-12 x 1 PANCAKE HEAD SELF-TAPPER [FASTENER #13] @ 24" O.C. (PRE-DRILL SUPPORT PLATE) [FASTENER #13] @ 5'-0" O.C.
NOTE: REFERENCE TYPICAL TRIM LAP SECTIONS

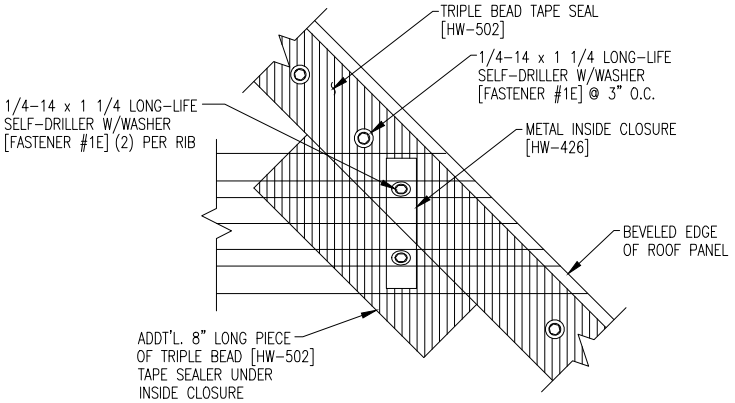
TRIPLE BEAD TAPE SEAL [HW-502]
1/4-14 x 1 1/4 LONG-LIFE SELF-DRILLER W/WASHER [FASTENER #1E] @ 3" O.C.
1/4-14 x 1 1/4 LONG-LIFE SELF-DRILLER W/WASHER [FASTENER #1E] (2) PER RIB
METAL INSIDE CLOSURE [HW-426]
BEVELED EDGE OF ROOF PANEL
ADDT'L. 8" LONG PIECE OF TRIPLE BEAD [HW-502] TAPE SEALER UNDER INSIDE CLOSURE

DETAIL "A"