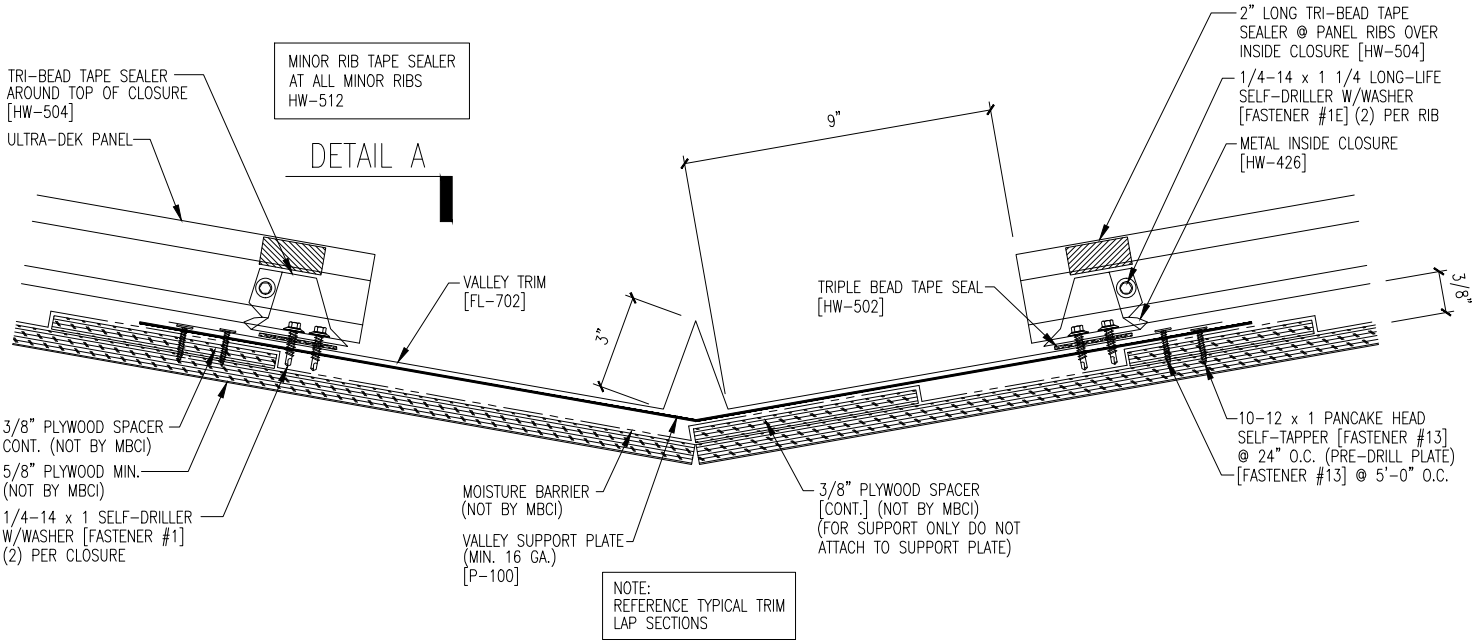
MINOR RIB TAPE SEALER
AT ALL MINOR RIBS
HW-512
DETAIL A
TRI-BEAD TAPE SEALER
AROUND TOP OF CLOSURE
[HW-504]
ULTRA-DEK PANEL
VALLEY TRIM
[FL-702]
3"
9"
TRIPLE BEAD TAPE SEAL
[HW-502]
2" LONG TRI-BEAD TAPE
SEALER @ PANEL RIBS OVER
INSIDE CLOSURE [HW-504]
1/4-14 x 1 1/4 LONG-LIFE
SELF-DRILLER W/WASHER
[FASTENER #1E] (2) PER RIB
METAL INSIDE CLOSURE
[HW-426]
3/8"
3/8" PLYWOOD SPACER
CONT. (NOT BY MBCI)
5/8" PLYWOOD MIN.
(NOT BY MBCI)
1/4-14 x 1 SELF-DRILLER
W/WASHER [FASTENER #1]
(2) PER CLOSURE
MOISTURE BARRIER
(NOT BY MBCI)
VALLEY SUPPORT PLATE
(MIN. 16 GA.)
[P-100]
3/8" PLYWOOD SPACER
[CONT.] (NOT BY MBCI)
(FOR SUPPORT ONLY DO NOT
ATTACH TO SUPPORT PLATE)
10-12 x 1 PANCAKE HEAD
SELF-TAPPER [FASTENER #13]
@ 24" O.C. (PRE-DRILL PLATE)
[FASTENER #13] @ 5'-0" O.C.
NOTE:
REFERENCE TYPICAL TRIM
LAP SECTIONS

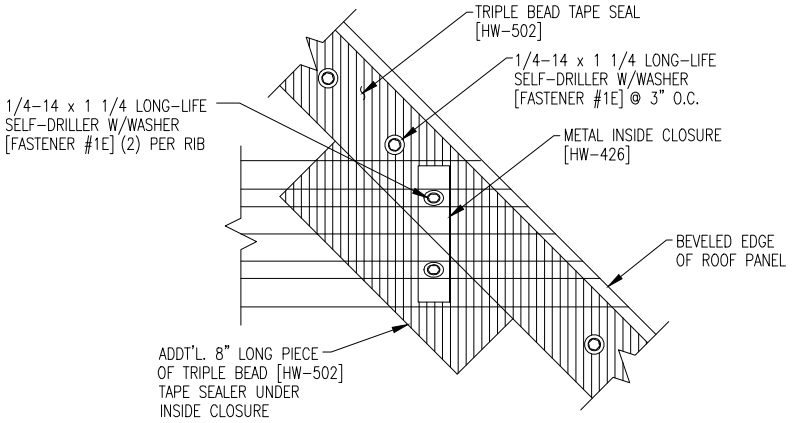
TRIPLE BEAD TAPE SEAL
[HW-502]
1/4-14 x 1 1/4 LONG-LIFE
SELF-DRILLER W/WASHER
[FASTENER #1E] @ 3" O.C.
1/4-14 x 1 1/4 LONG-LIFE
SELF-DRILLER W/WASHER
[FASTENER #1E] (2) PER RIB
METAL INSIDE CLOSURE
[HW-426]
BEVELED EDGE
OF ROOF PANEL
ADDT'L. 8" LONG PIECE
OF TRIPLE BEAD [HW-502]
TAPE SEALER UNDER
INSIDE CLOSURE

DETAIL "A"