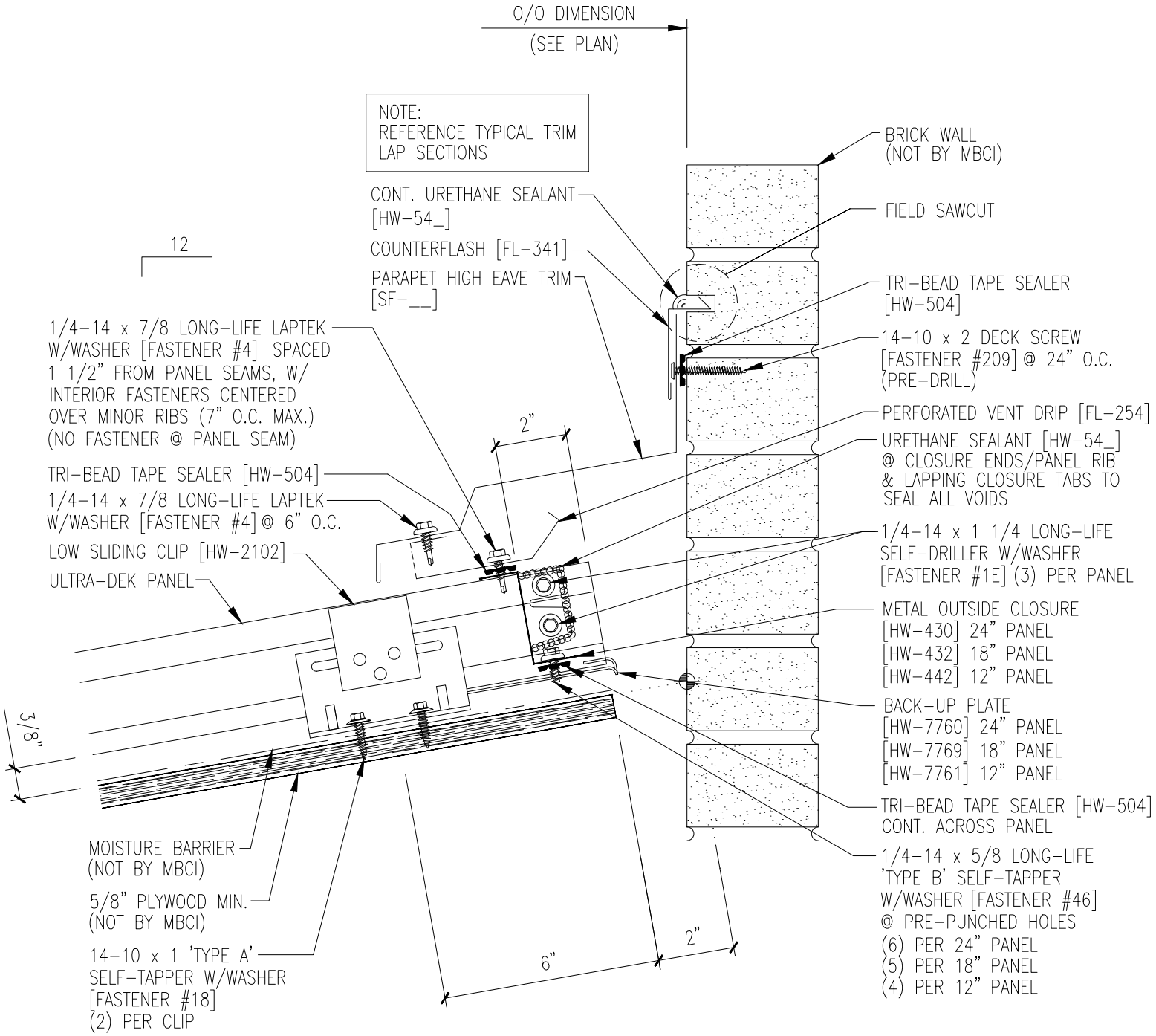
O/O DIMENSION
(SEE PLAN)
NOTE:
REFERENCE TYPICAL TRIM
LAP SECTIONS
12
BRICK WALL
(NOT BY MBCI)
FIELD SAWCUT
CONT. URETHANE SEALANT
[HW-54_]
COUNTERFLASH [FL-341]
PARAPET HIGH EAVE TRIM
[SF-__]
TRI-BEAD TAPE SEALER
[HW-504]
14-10 x 2 DECK SCREW
[FASTENER #209] @ 24" O.C.
(PRE-DRILL)
1/4-14 x 7/8 LONG-LIFE LAPTEK
W/WASHER [FASTENER #4] SPACED
1 1/2" FROM PANEL SEAMS, W/
INTERIOR FASTENERS CENTERED
OVER MINOR RIBS (7" O.C. MAX.)
(NO FASTENER @ PANEL SEAM)
PERFORATED VENT DRIP [FL-254]
2"
URETHANE SEALANT [HW-54_]
@ CLOSURE ENDS/PANEL RIB
& LAPPING CLOSURE TABS TO
SEAL ALL VOIDS
TRI-BEAD TAPE SEALER [HW-504]
1/4-14 x 7/8 LONG-LIFE LAPTEK
W/WASHER [FASTENER #4] @ 6" O.C.
LOW SLIDING CLIP [HW-2102]
1/4-14 x 1 1/4 LONG-LIFE
SELF-DRILLER W/WASHER
[FASTENER #1E] (3) PER PANEL
ULTRA-DEK PANEL
METAL OUTSIDE CLOSURE
[HW-430] 24" PANEL
[HW-432] 18" PANEL
[HW-442] 12" PANEL
3/8"
BACK-UP PLATE
[HW-7760] 24" PANEL
[HW-7769] 18" PANEL
[HW-7761] 12" PANEL
TRI-BEAD TAPE SEALER [HW-504]
CONT. ACROSS PANEL
MOISTURE BARRIER
(NOT BY MBCI)
1/4-14 x 5/8 LONG-LIFE
'TYPE B' SELF-TAPPER
W/WASHER [FASTENER #46]
@ PRE-PUNCHED HOLES
(6) PER 24" PANEL
(5) PER 18" PANEL
(4) PER 12" PANEL
5/8" PLYWOOD MIN.
(NOT BY MBCI)
14-10 x 1 'TYPE A'
SELF-TAPPER W/WASHER
[FASTENER #18]
(2) PER CLIP
6"
2"