MasterLine 16 Vertical Panel
Base Without Notch
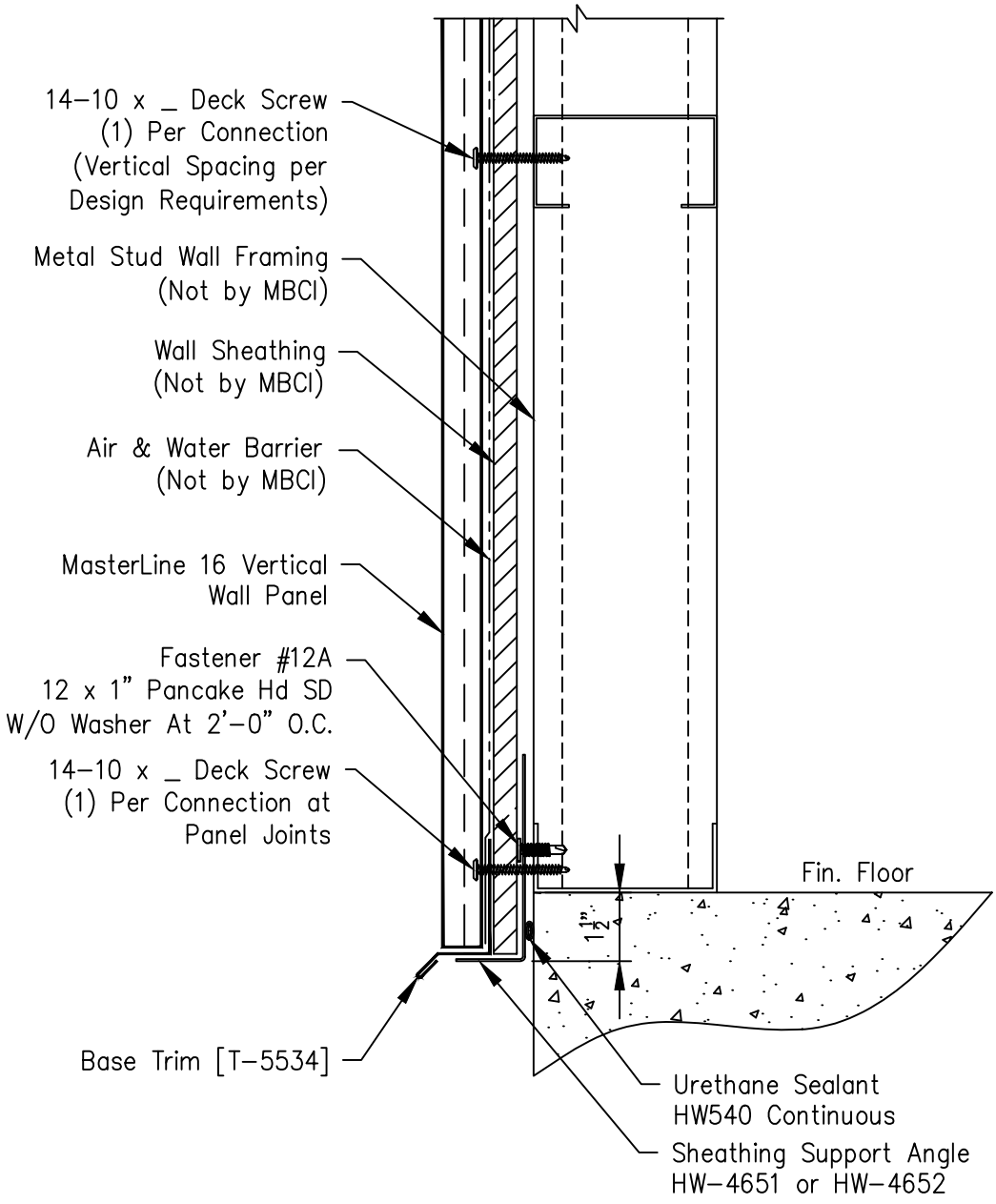
Page	
VML-BS-01	
Date	Rev
Mar '17	00