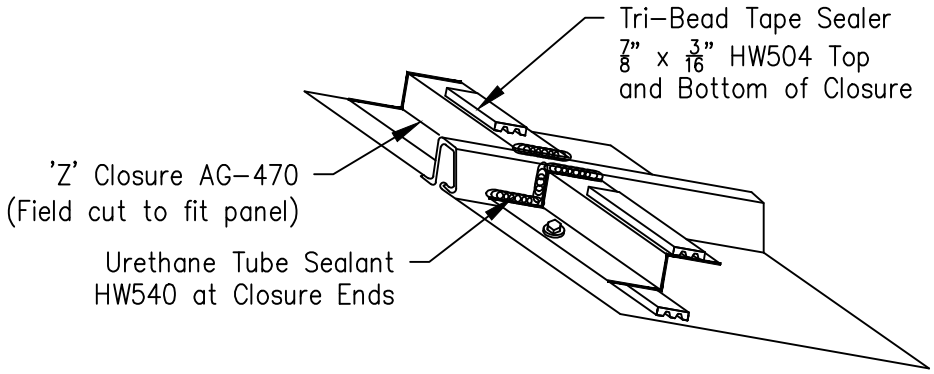
Tri–Bead Tape Sealer
7/8" x 3/16" HW504 Top
and Bottom of Closure
'Z' Closure AG–470
(Field cut to fit panel)
Urethane Tube Sealant
HW540 at Closure Ends

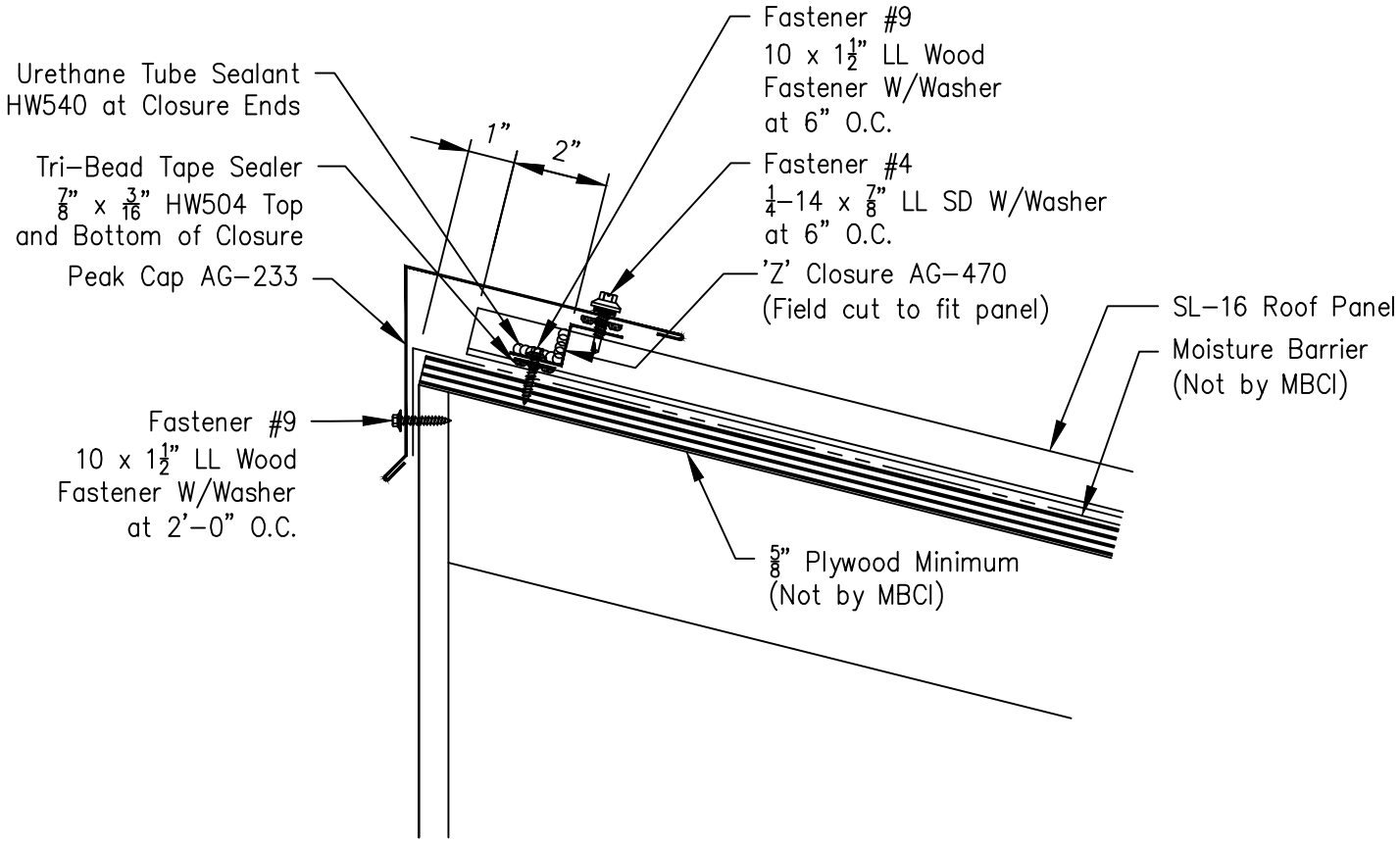
Urethane Tube Sealant
HW540 at Closure Ends
Tri–Bead Tape Sealer
7/8" x 3/16" HW504 Top
and Bottom of Closure
Peak Cap AG–233
Fastener #9
10 x 1 1/2" LL Wood
Fastener W/Washer
at 2'–0" O.C.
1"
2"
Fastener #9
10 x 1 1/2" LL Wood
Fastener W/Washer
at 6" O.C.
Fastener #4
1/4–14 x 7/8" LL SD W/Washer
at 6" O.C.
'Z' Closure AG–470
(Field cut to fit panel)
SL–16 Roof Panel
Moisture Barrier
(Not by MBCI)
5/8" Plywood Minimum
(Not by MBCI)