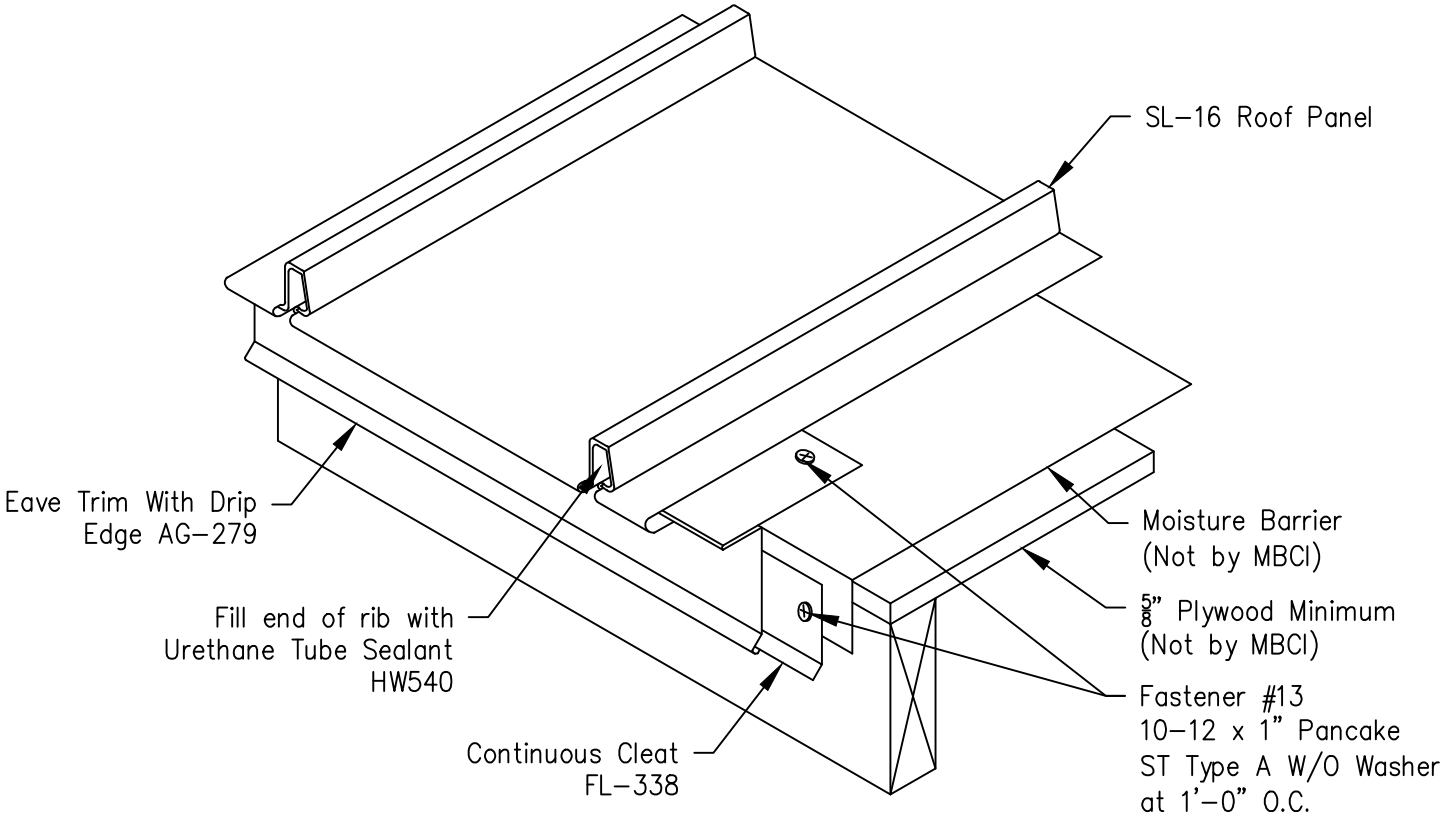

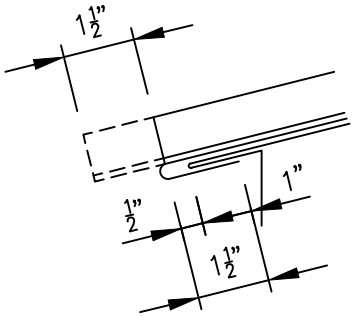
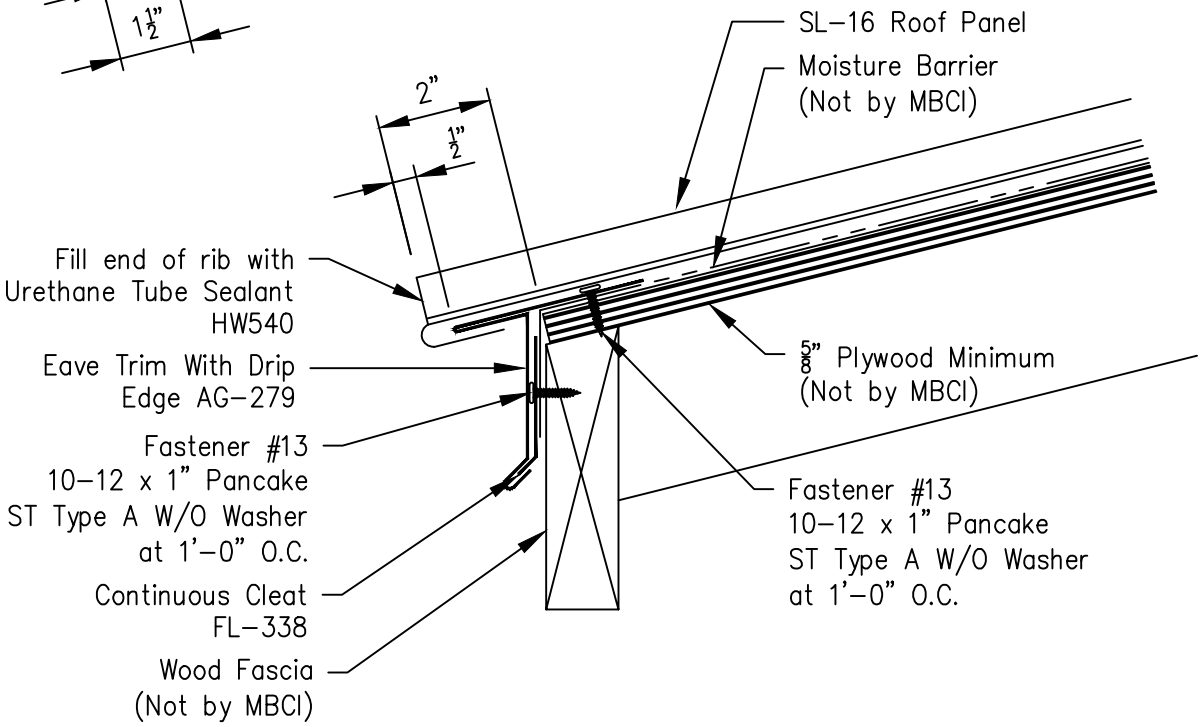
Field Notch Panel Legs 1 1/2" and Bend Pan to Form Open Hem
Note: Panels With Minor Ribs Cannot be Hemmed