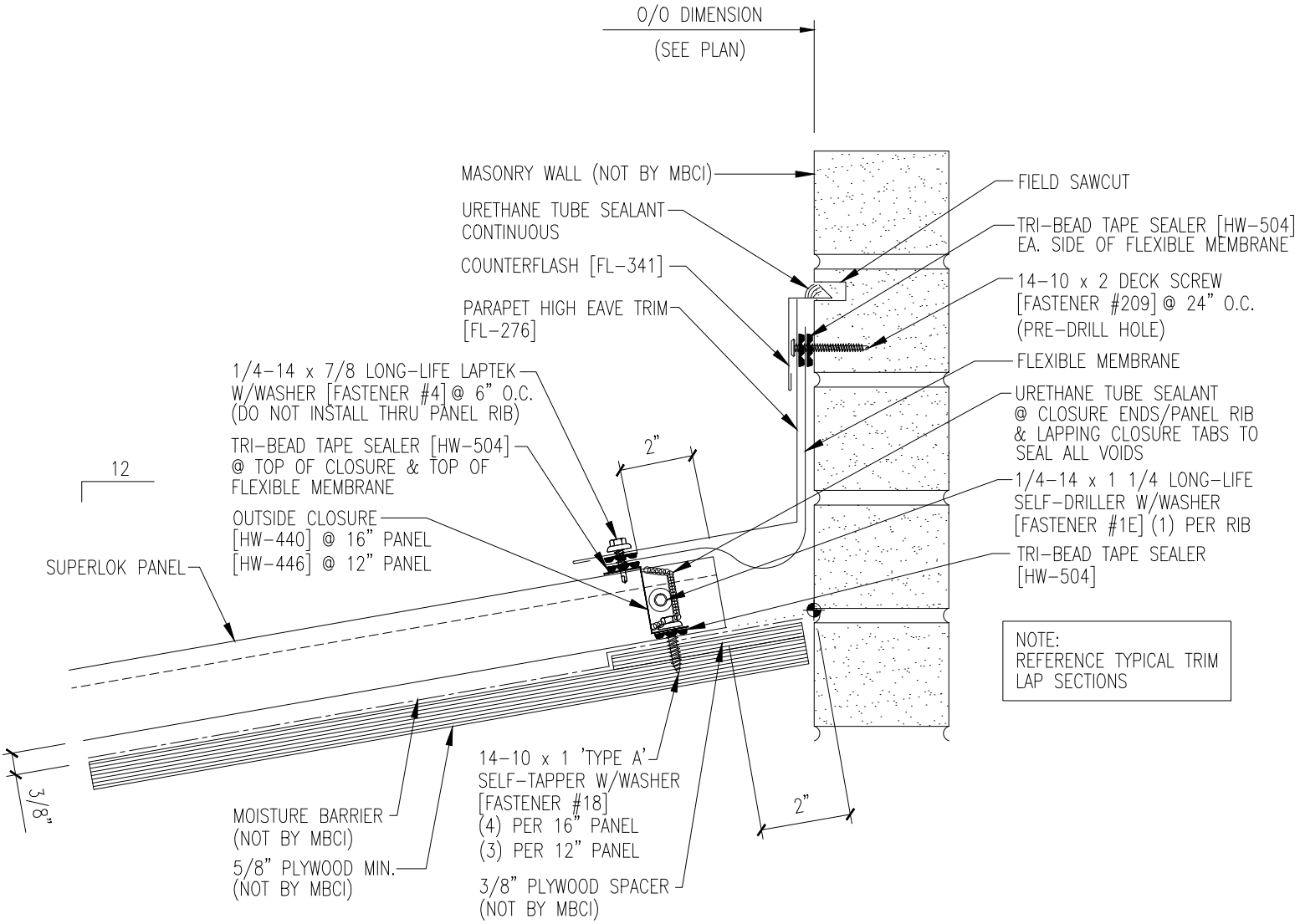
O/O DIMENSION
(SEE PLAN)
MASONRY WALL (NOT BY MBCI)
URETHANE TUBE SEALANT CONTINUOUS
COUNTERFLASH [FL-341]
PARAPET HIGH EAVE TRIM [FL-276]
1/4-14 x 7/8 LONG-LIFE LAPTEK W/WASHER [FASTENER #4] @ 6" O.C. (DO NOT INSTALL THRU PANEL RIB)
TRI-BEAD TAPE SEALER [HW-504] @ TOP OF CLOSURE & TOP OF FLEXIBLE MEMBRANE
OUTSIDE CLOSURE [HW-440] @ 16" PANEL [HW-446] @ 12" PANEL
12
SUPERLOK PANEL
2"
FIELD SAWCUT
TRI-BEAD TAPE SEALER [HW-504] EA. SIDE OF FLEXIBLE MEMBRANE
14-10 x 2 DECK SCREW [FASTENER #209] @ 24" O.C. (PRE-DRILL HOLE)
FLEXIBLE MEMBRANE
URETHANE TUBE SEALANT @ CLOSURE ENDS/PANEL RIB & LAPPING CLOSURE TABS TO SEAL ALL VOIDS
1/4-14 x 1 1/4 LONG-LIFE SELF-DRILLER W/WASHER [FASTENER #1E] (1) PER RIB
TRI-BEAD TAPE SEALER [HW-504]
NOTE:
REFERENCE TYPICAL TRIM LAP SECTIONS
3/8"
MOISTURE BARRIER (NOT BY MBCI)
5/8" PLYWOOD MIN. (NOT BY MBCI)
14-10 x 1 'TYPE A' SELF-TAPPER W/WASHER [FASTENER #18] (4) PER 16" PANEL (3) PER 12" PANEL
3/8" PLYWOOD SPACER (NOT BY MBCI)
2"