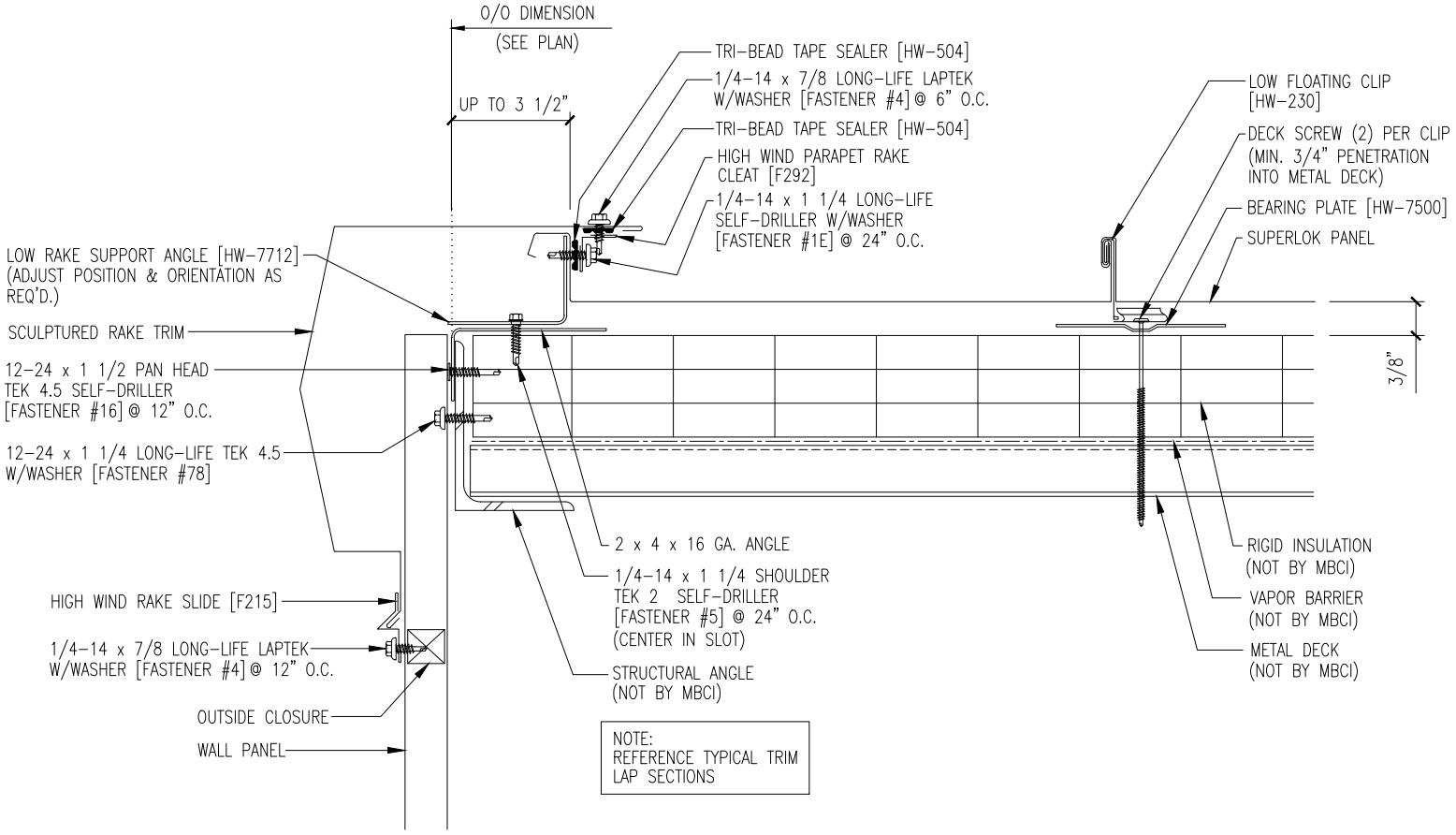
O/O DIMENSION
(SEE PLAN)
UP TO 3 1/2"
TRI-BEAD TAPE SEALER [HW-504]
1/4-14 x 7/8 LONG-LIFE LAPTEK W/WASHER [FASTENER #4] @ 6" O.C.
TRI-BEAD TAPE SEALER [HW-504]
HIGH WIND PARAPET RAKE CLEAT [F292]
1/4-14 x 1 1/4 LONG-LIFE SELF-DRILLER W/WASHER [FASTENER #1E] @ 24" O.C.
LOW FLOATING CLIP [HW-230]
DECK SCREW (2) PER CLIP (MIN. 3/4" PENETRATION INTO METAL DECK)
BEARING PLATE [HW-7500]
SUPERLOK PANEL
LOW RAKE SUPPORT ANGLE [HW-7712] (ADJUST POSITION & ORIENTATION AS REQ'D.)
SCULPTURED RAKE TRIM
12-24 x 1 1/2 PAN HEAD TEK 4.5 SELF-DRILLER [FASTENER #16] @ 12" O.C.
12-24 x 1 1/4 LONG-LIFE TEK 4.5 W/WASHER [FASTENER #78]
3/8"
2 x 4 x 16 GA. ANGLE
1/4-14 x 1 1/4 SHOULDER TEK 2 SELF-DRILLER [FASTENER #5] @ 24" O.C. (CENTER IN SLOT)
STRUCTURAL ANGLE (NOT BY MBCI)
RIGID INSULATION (NOT BY MBCI)
VAPOR BARRIER (NOT BY MBCI)
METAL DECK (NOT BY MBCI)
HIGH WIND RAKE SLIDE [F215]
1/4-14 x 7/8 LONG-LIFE LAPTEK W/WASHER [FASTENER #4] @ 12" O.C.
OUTSIDE CLOSURE
WALL PANEL
NOTE:
REFERENCE TYPICAL TRIM LAP SECTIONS