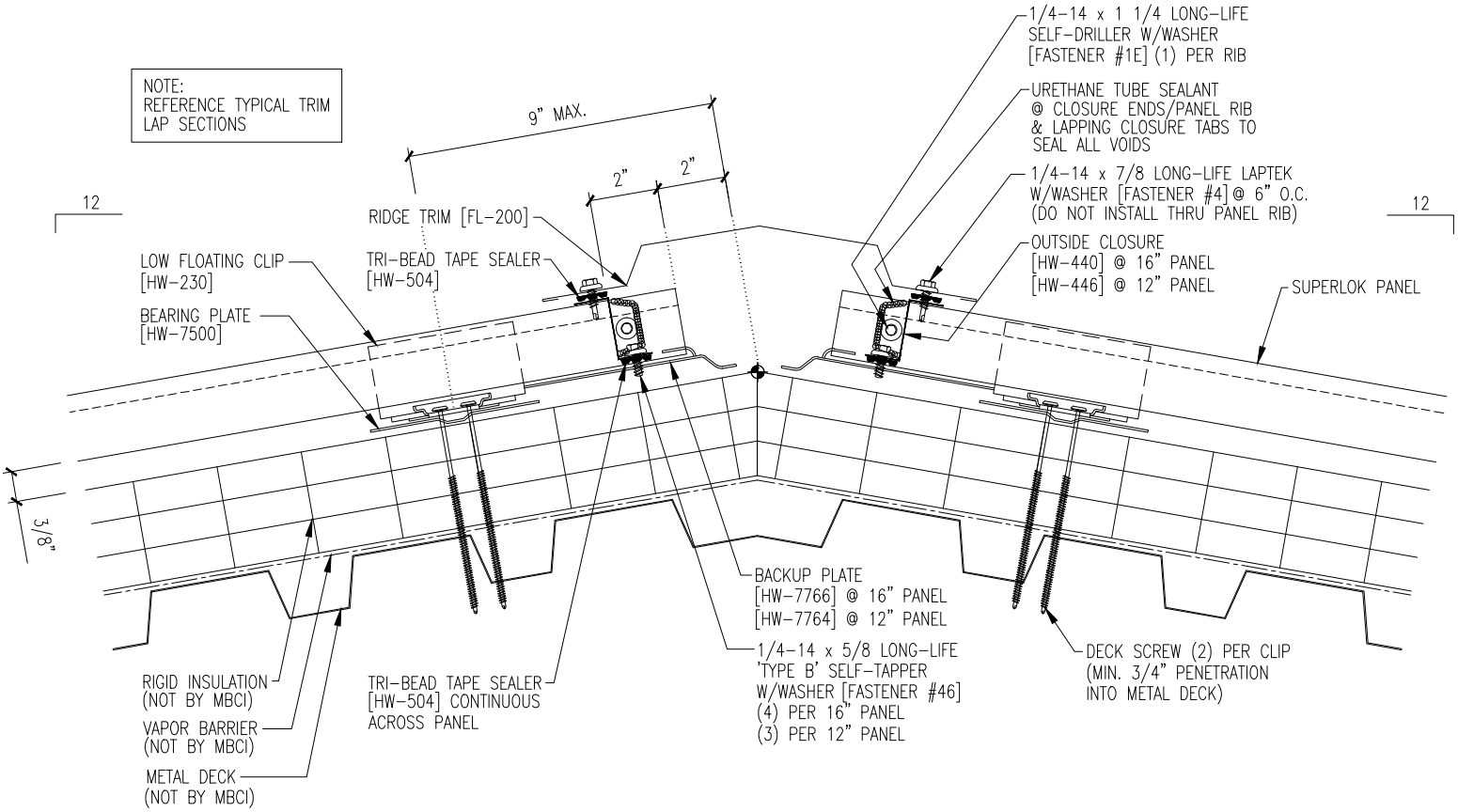
NOTE:
REFERENCE TYPICAL TRIM
LAP SECTIONS
9" MAX.
2"
2"
12
12
RIDGE TRIM [FL-200]
LOW FLOATING CLIP
[HW-230]
TRI-BEAD TAPE SEALER
[HW-504]
BEARING PLATE
[HW-7500]
1/4-14 x 1 1/4 LONG-LIFE
SELF-DRILLER W/WASHER
[FASTENER #1E] (1) PER RIB
URETHANE TUBE SEALANT
@ CLOSURE ENDS/PANEL RIB
& LAPPING CLOSURE TABS TO
SEAL ALL VOIDS
1/4-14 x 7/8 LONG-LIFE LAPTEK
W/WASHER [FASTENER #4] @ 6" O.C.
(DO NOT INSTALL THRU PANEL RIB)
OUTSIDE CLOSURE
[HW-440] @ 16" PANEL
[HW-446] @ 12" PANEL
SUPERLOK PANEL
3/8"
BACKUP PLATE
[HW-7766] @ 16" PANEL
[HW-7764] @ 12" PANEL
1/4-14 x 5/8 LONG-LIFE
'TYPE B' SELF-TAPPER
W/WASHER [FASTENER #46]
(4) PER 16" PANEL
(3) PER 12" PANEL
DECK SCREW (2) PER CLIP
(MIN. 3/4" PENETRATION
INTO METAL DECK)
RIGID INSULATION
(NOT BY MBCI)
VAPOR BARRIER
(NOT BY MBCI)
METAL DECK
(NOT BY MBCI)
TRI-BEAD TAPE SEALER
[HW-504] CONTINUOUS
ACROSS PANEL