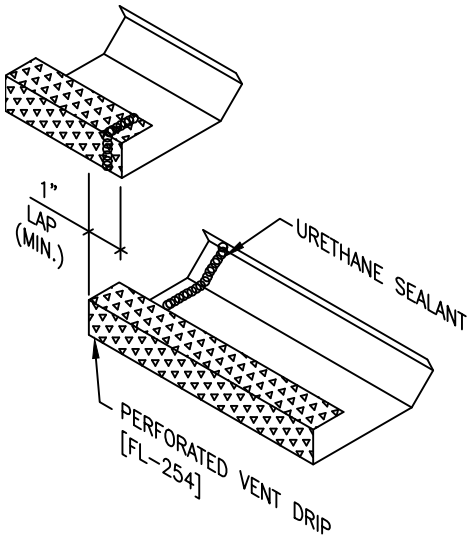
1"
LAP
(MIN.)
URETHANE SEALANT
PERFORATED VENT DRIP
[FL-254]

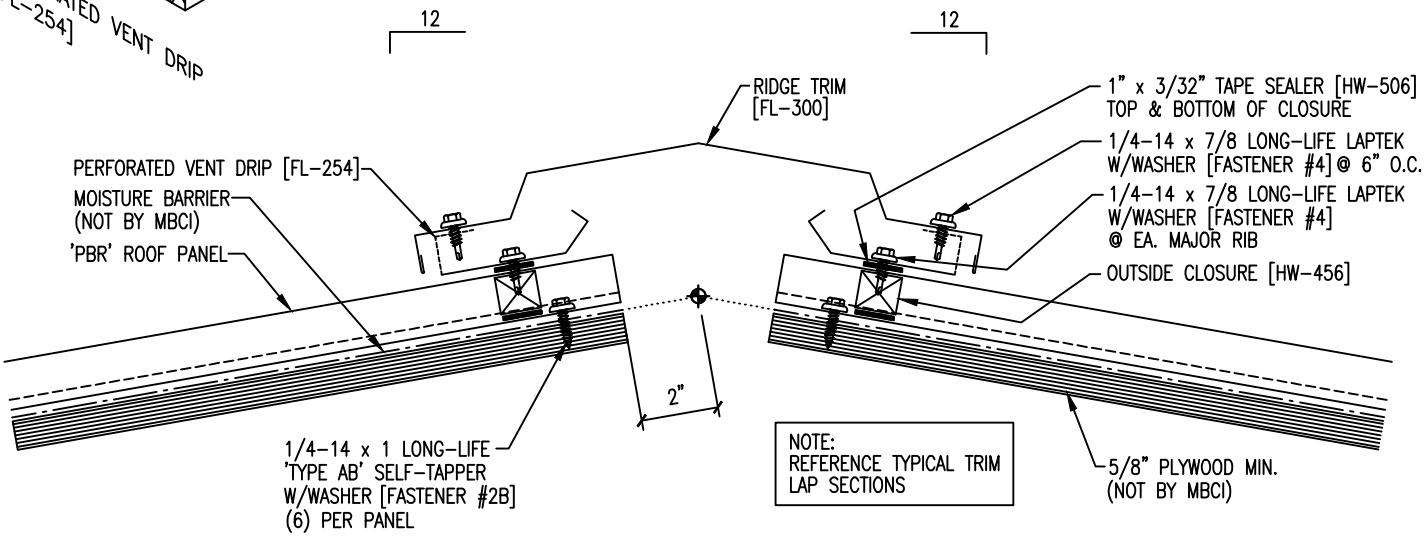
12
12
RIDGE TRIM
[FL-300]
1" x 3/32" TAPE SEALER [HW-506]
TOP & BOTTOM OF CLOSURE
1/4-14 x 7/8 LONG-LIFE LAPTEK
W/WASHER [FASTENER #4] @ 6" O.C.
1/4-14 x 7/8 LONG-LIFE LAPTEK
W/WASHER [FASTENER #4]
@ EA. MAJOR RIB
OUTSIDE CLOSURE [HW-456]
PERFORATED VENT DRIP [FL-254]
MOISTURE BARRIER
(NOT BY MBCI)
'PBR' ROOF PANEL
2"
1/4-14 x 1 LONG-LIFE
'TYPE AB' SELF-TAPPER
W/WASHER [FASTENER #2B]
(6) PER PANEL
NOTE:
REFERENCE TYPICAL TRIM
LAP SECTIONS
5/8" PLYWOOD MIN.
(NOT BY MBCI)