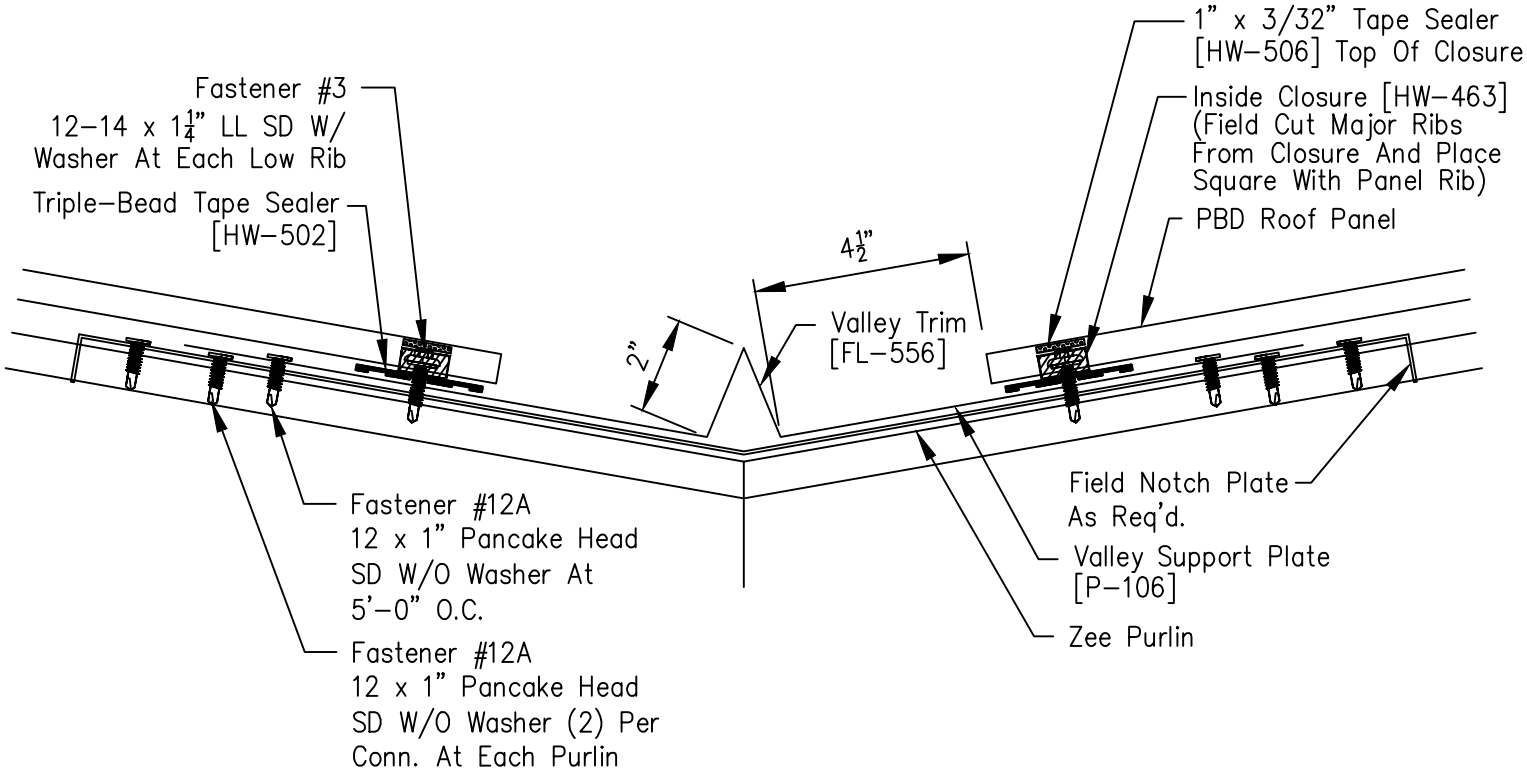
Fastener #3
12–14 x 1¼" LL SD W/
Washer At Each Low Rib
Triple–Bead Tape Sealer
[HW–502]
1" x 3/32" Tape Sealer
[HW–506] Top Of Closure
Inside Closure [HW–463]
(Field Cut Major Ribs
From Closure And Place
Square With Panel Rib)
PBD Roof Panel
4½"
2"
Valley Trim
[FL–556]
Field Notch Plate
As Req'd.
Valley Support Plate
[P–106]
Zee Purlin
Fastener #12A
12 x 1" Pancake Head
SD W/O Washer At
5'–0" O.C.
Fastener #12A
12 x 1" Pancake Head
SD W/O Washer (2) Per
Conn. At Each Purlin