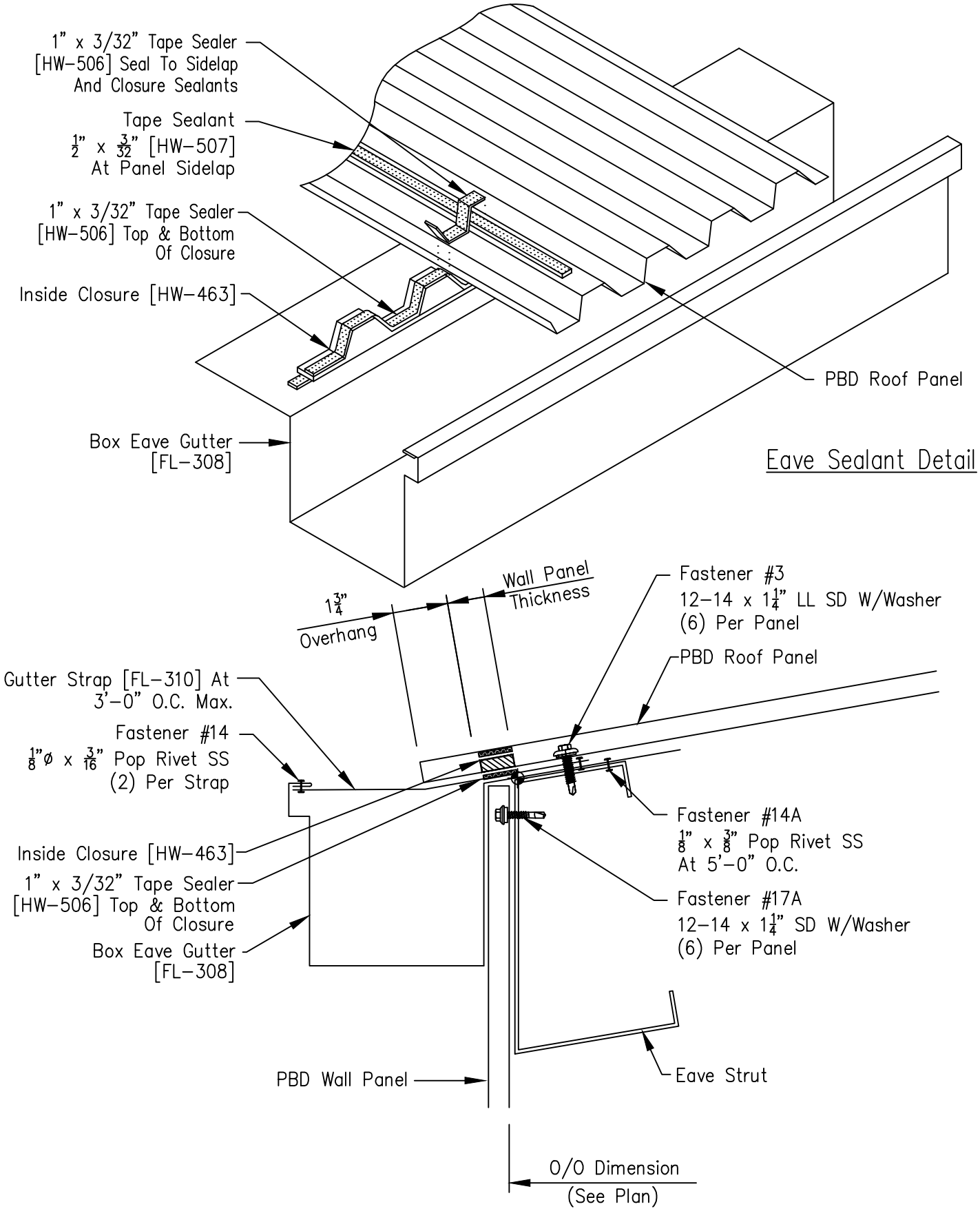
1" x 3/32" Tape Sealer [HW-506] Seal To Sidelap And Closure Sealants
Tape Sealant 1/2" x 3/32" [HW-507] At Panel Sidelap
1" x 3/32" Tape Sealer [HW-506] Top & Bottom Of Closure
Inside Closure [HW-463]
PBD Roof Panel
Box Eave Gutter [FL-308]
Eave Sealant Detail
1 3/4" Overhang
Wall Panel Thickness
Fastener #3 12-14 x 1 1/4" LL SD W/Washer (6) Per Panel
PBD Roof Panel
Gutter Strap [FL-310] At 3'-0" O.C. Max.
Fastener #14 1/8"Ø x 3/16" Pop Rivet SS (2) Per Strap
Fastener #14A 1/8" x 3/8" Pop Rivet SS At 5'-0" O.C.
Inside Closure [HW-463]
1" x 3/32" Tape Sealer [HW-506] Top & Bottom Of Closure
Fastener #17A 12-14 x 1 1/4" SD W/Washer (6) Per Panel
Box Eave Gutter [FL-308]
PBD Wall Panel
Eave Strut
O/O Dimension (See Plan)