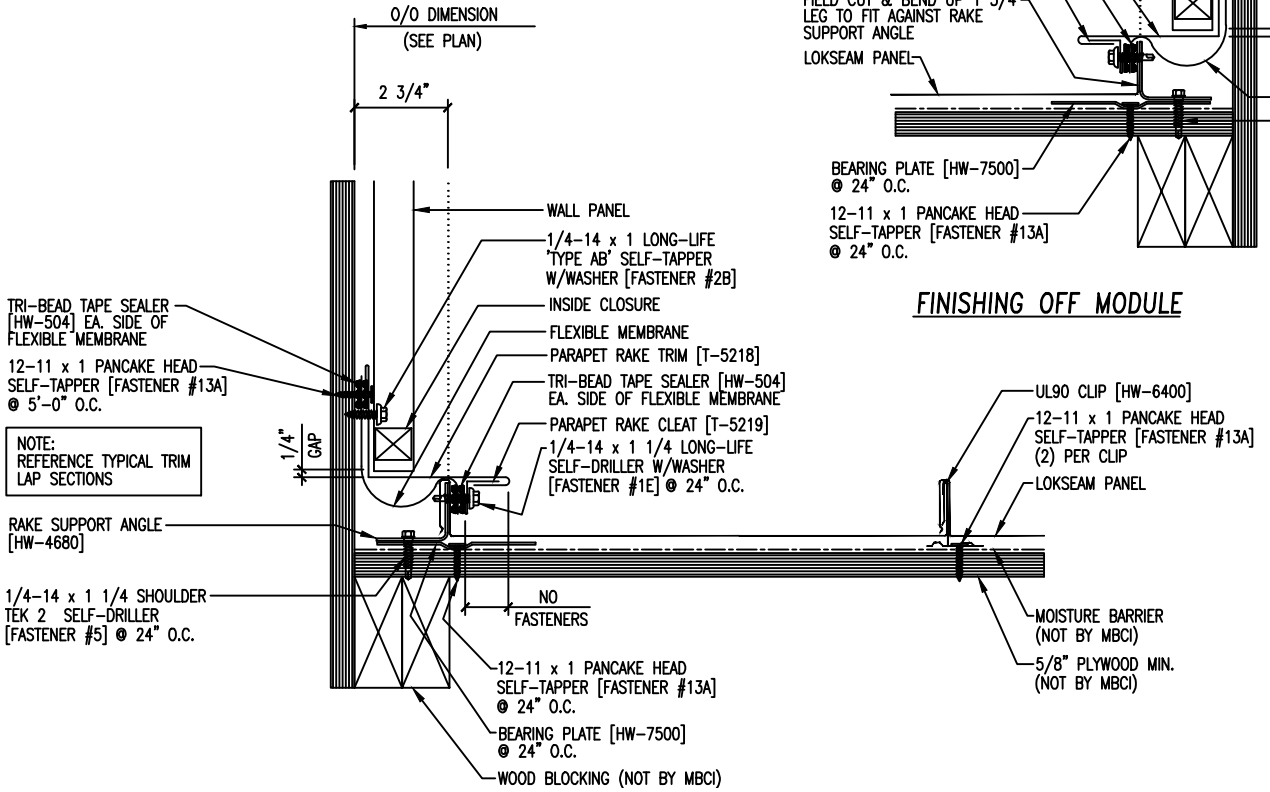

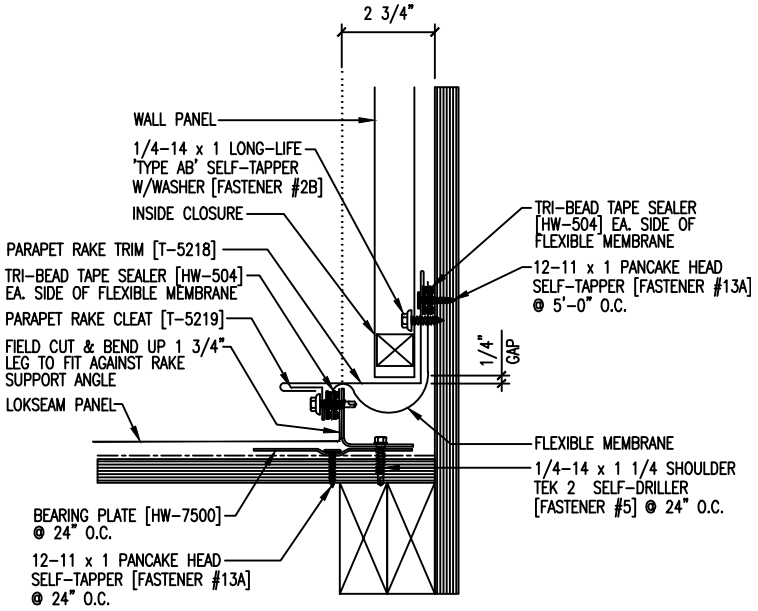

FINISHING OFF MODULE