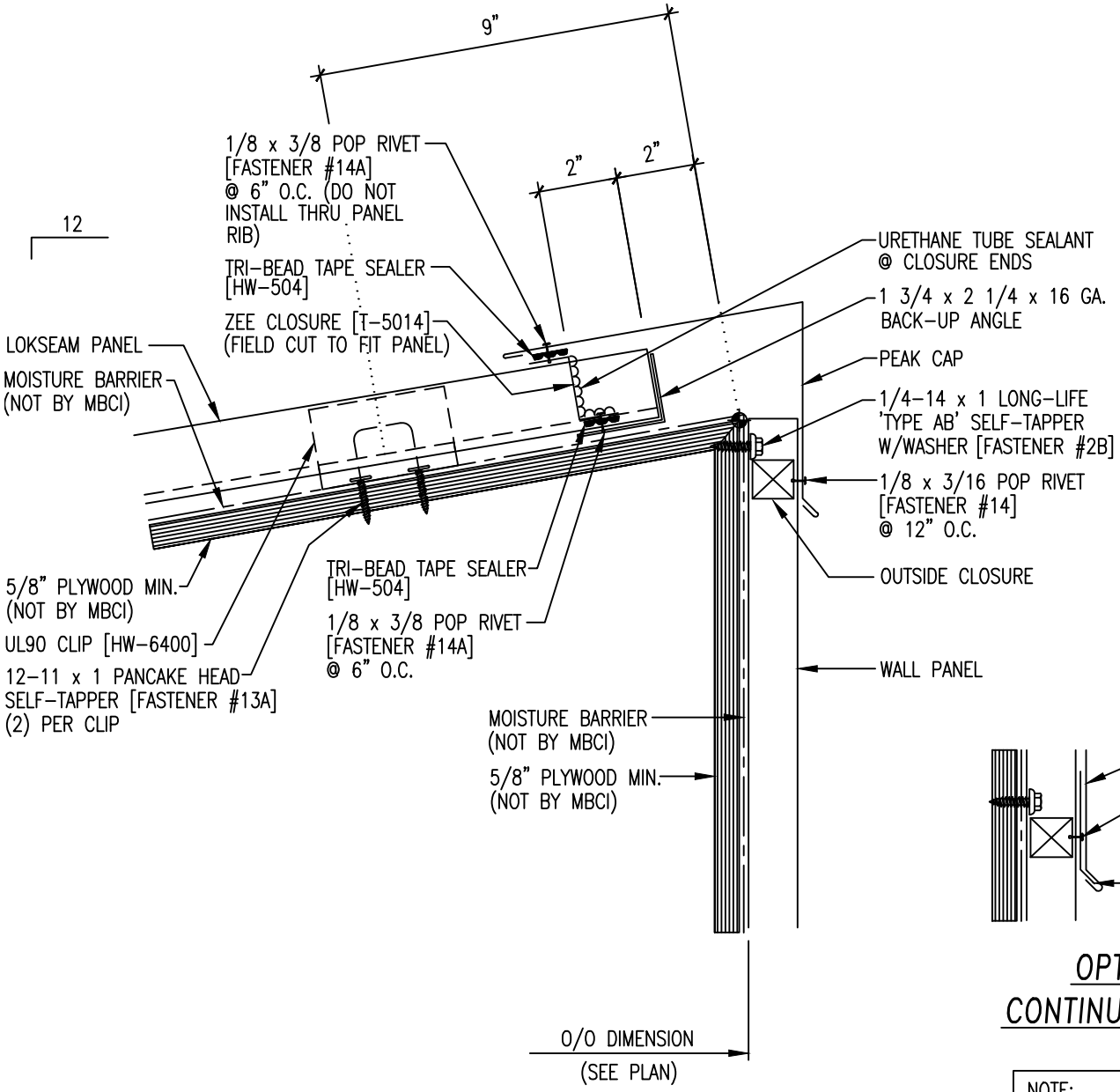

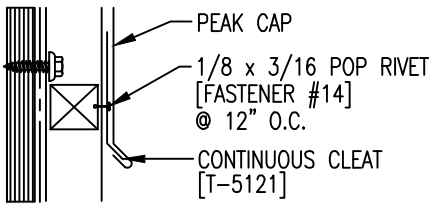

OPTIONAL CONTINUOUS CLEAT

NOTE:
REFERENCE TYPICAL TRIM LAP SECTIONS