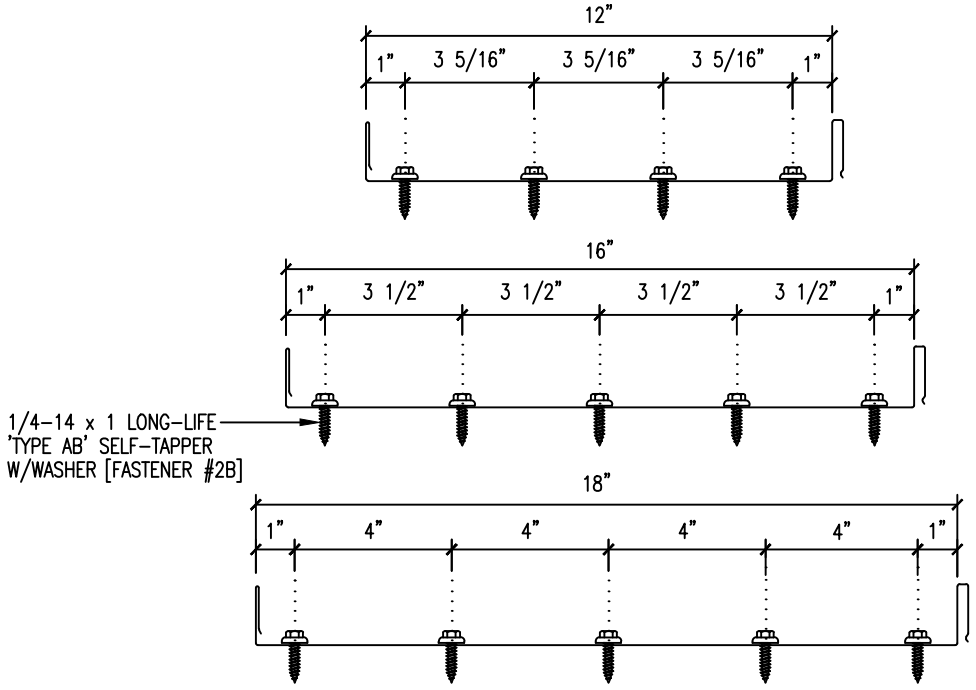
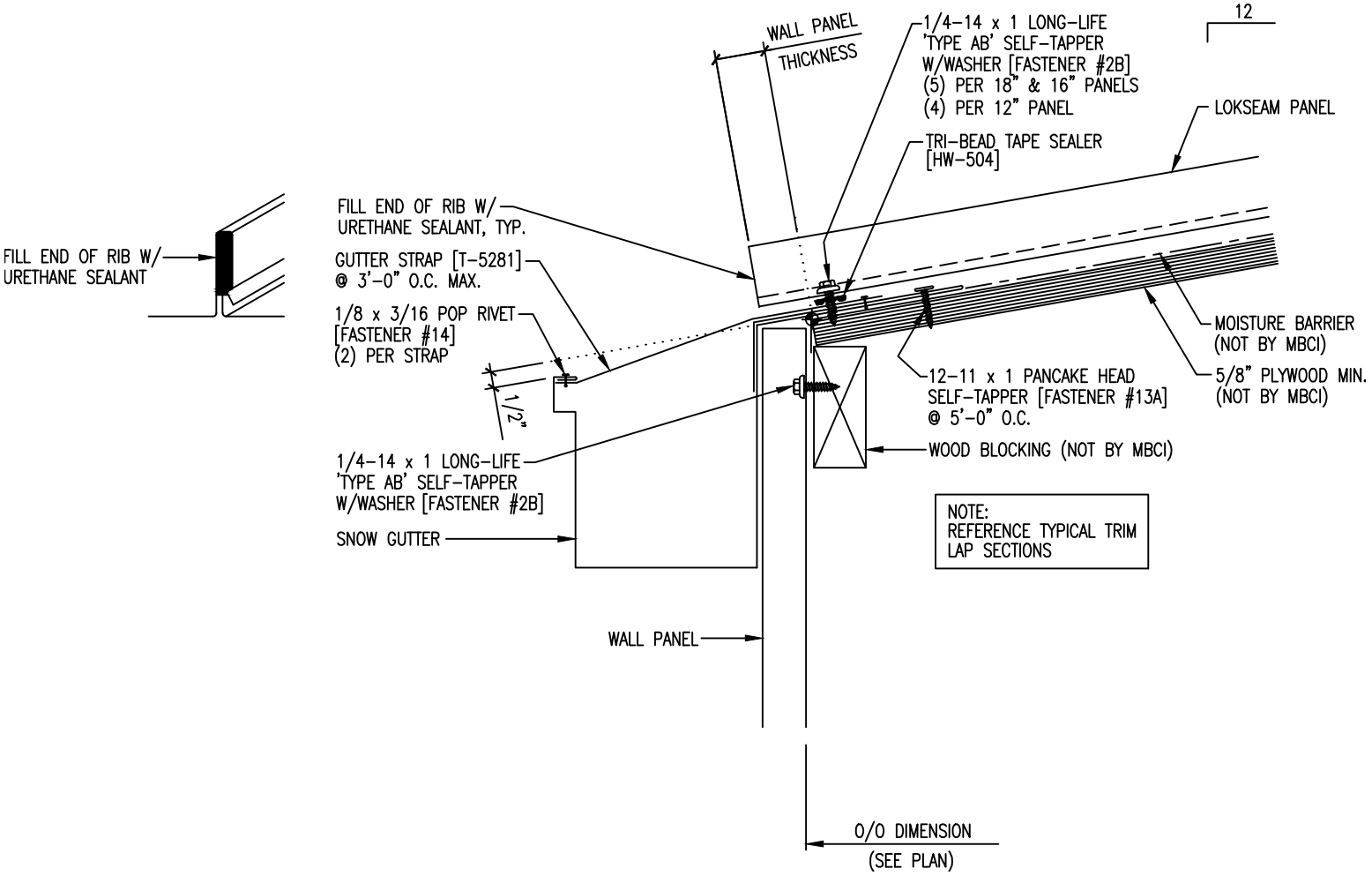
FASTENER SPACING @ EAVE