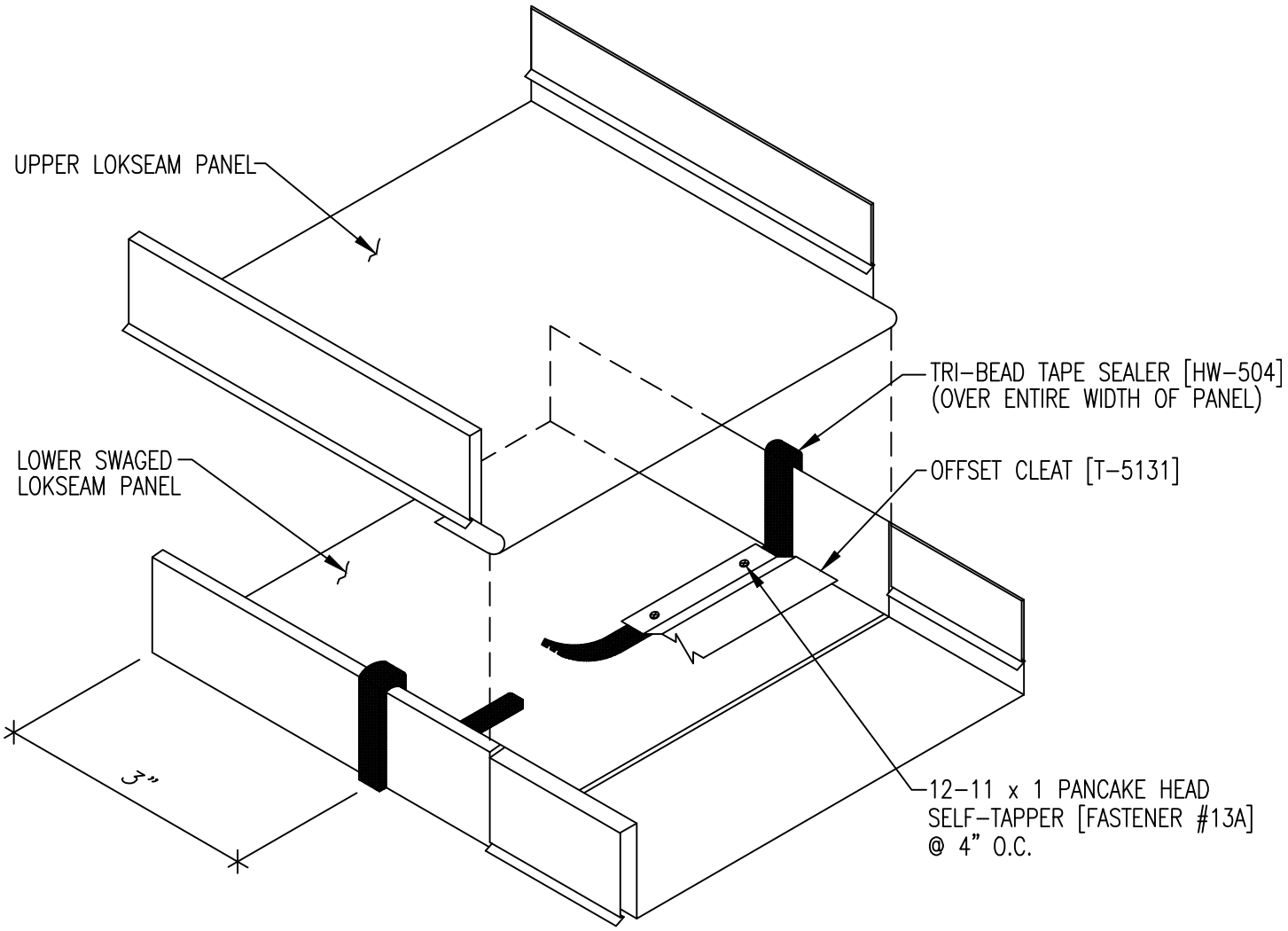
UPPER LOKSEAM PANEL
TRI-BEAD TAPE SEALER [HW-504]
(OVER ENTIRE WIDTH OF PANEL)
LOWER SWAGED
LOKSEAM PANEL
OFFSET CLEAT [T-5131]
3"
12-11 x 1 PANCAKE HEAD
SELF-TAPPER [FASTENER #13A]
@ 4" O.C.

12

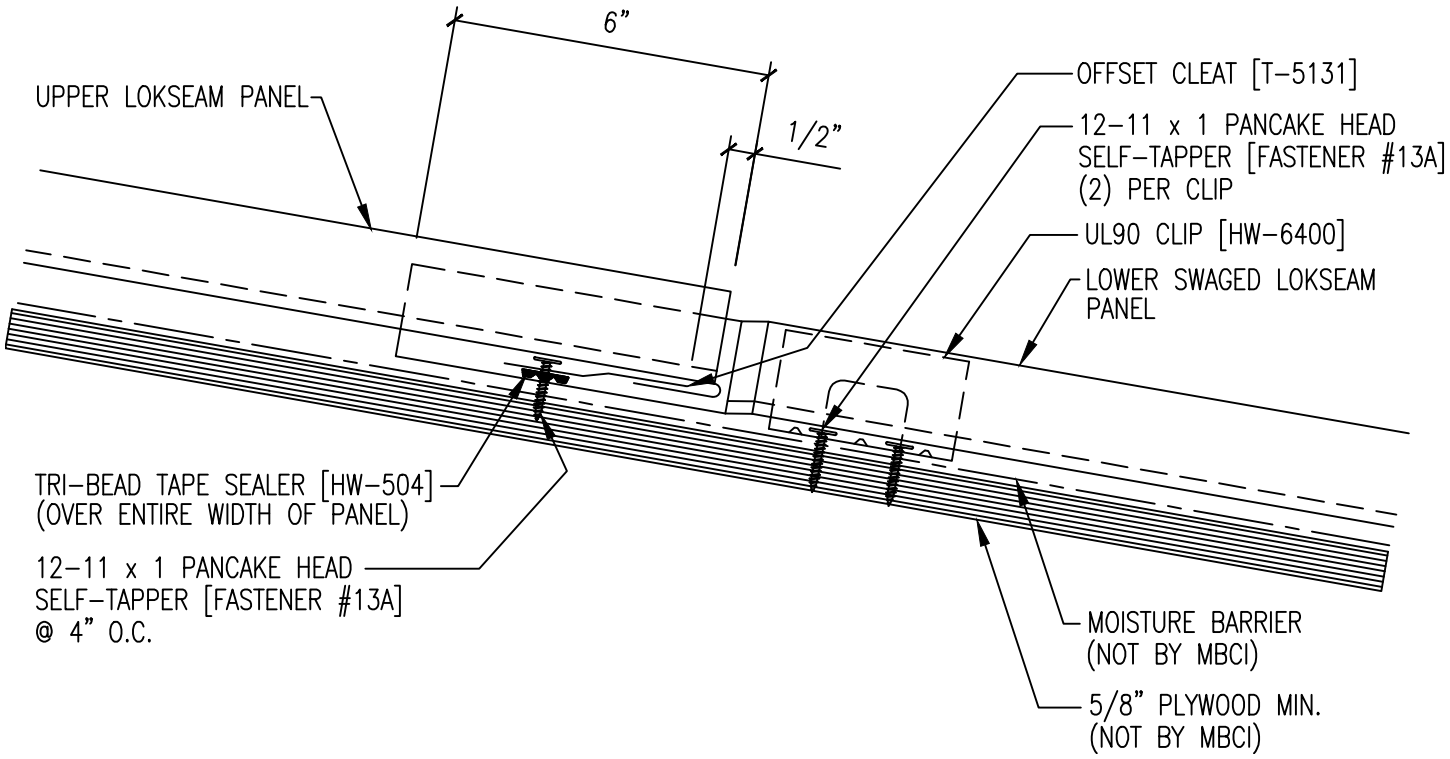
6"
1/2"
UPPER LOKSEAM PANEL
OFFSET CLEAT [T-5131]
12-11 x 1 PANCAKE HEAD
SELF-TAPPER [FASTENER #13A]
(2) PER CLIP
UL90 CLIP [HW-6400]
LOWER SWAGED LOKSEAM
PANEL
TRI-BEAD TAPE SEALER [HW-504]
(OVER ENTIRE WIDTH OF PANEL)
12-11 x 1 PANCAKE HEAD
SELF-TAPPER [FASTENER #13A]
@ 4" O.C.
MOISTURE BARRIER
(NOT BY MBCI)
5/8" PLYWOOD MIN.
(NOT BY MBCI)