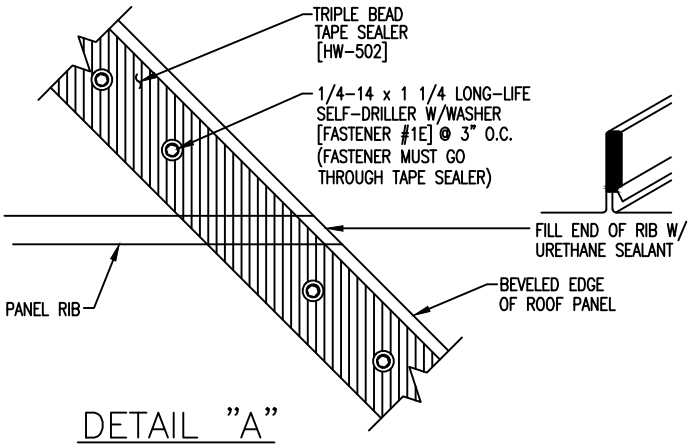

DETAIL "A"

DETAIL A

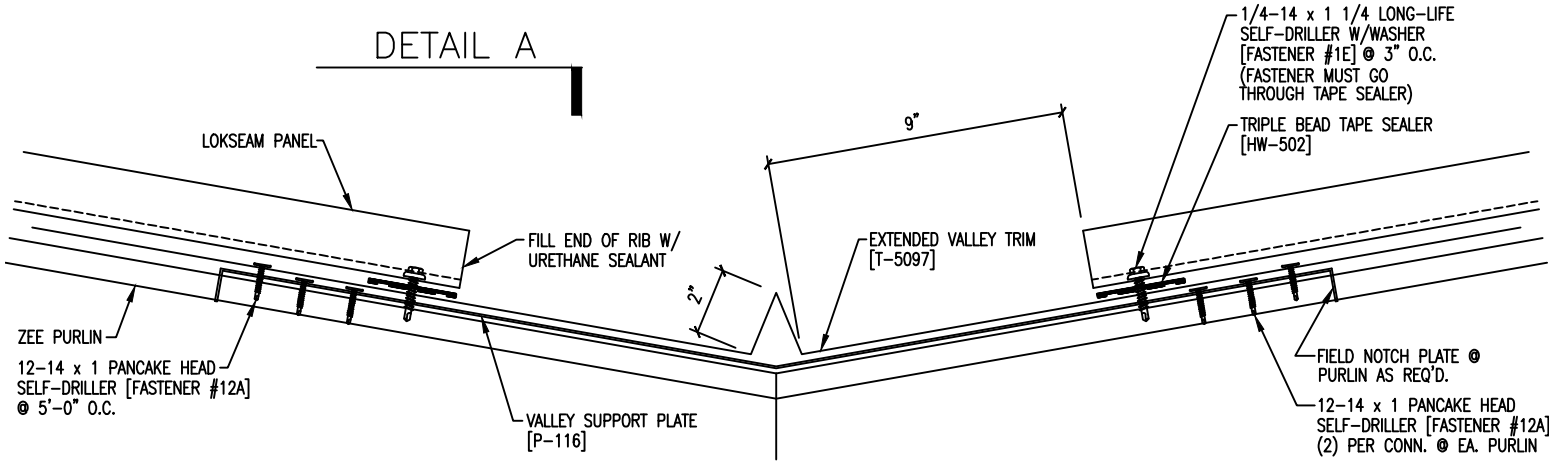

NOTE:
REFERENCE TYPICAL TRIM
LAP SECTIONS