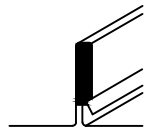

FILL END OF RIB W/
URETHANE SEALANT

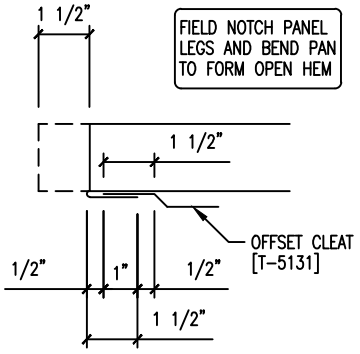

FIELD NOTCH PANEL
LEGS AND BEND PAN
TO FORM OPEN HEM

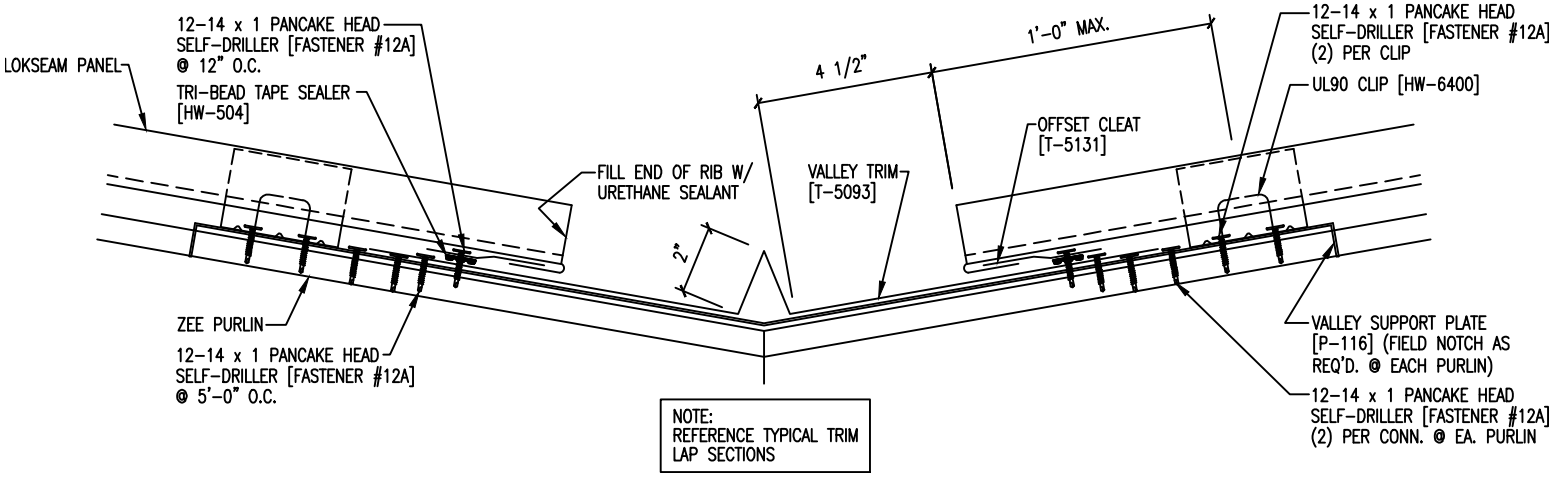

NOTE:
REFERENCE TYPICAL TRIM
LAP SECTIONS