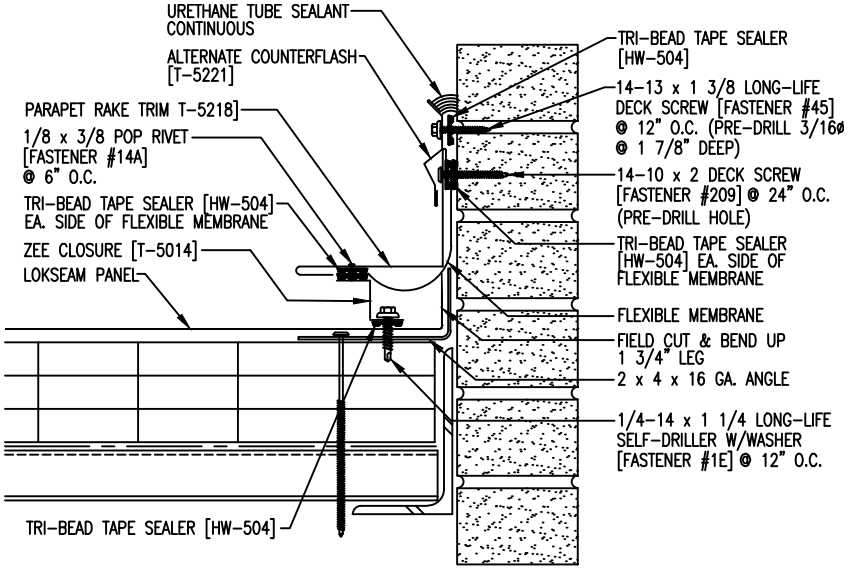

FINISHING OFF MODULE

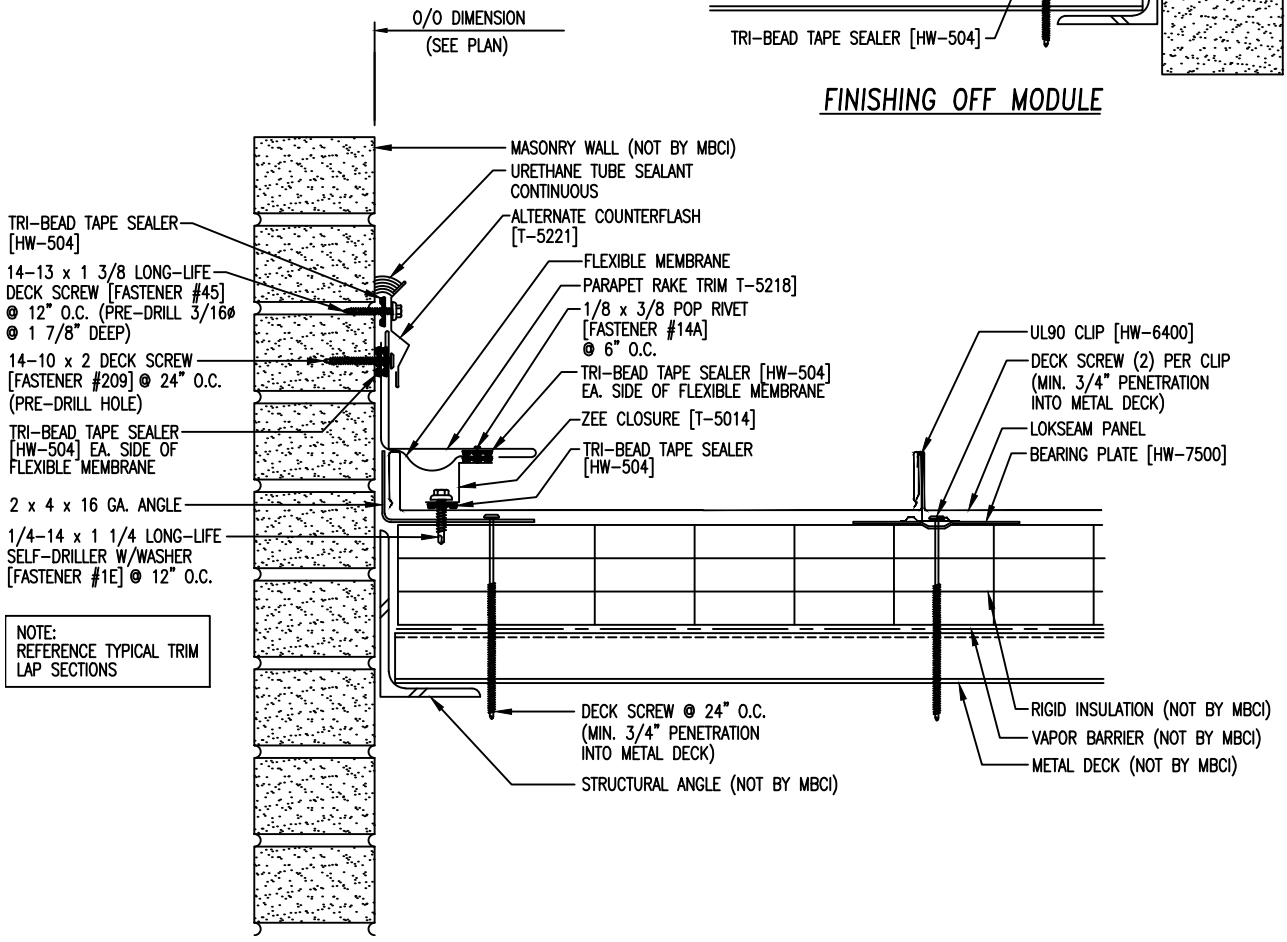

NOTE:
REFERENCE TYPICAL TRIM LAP SECTIONS