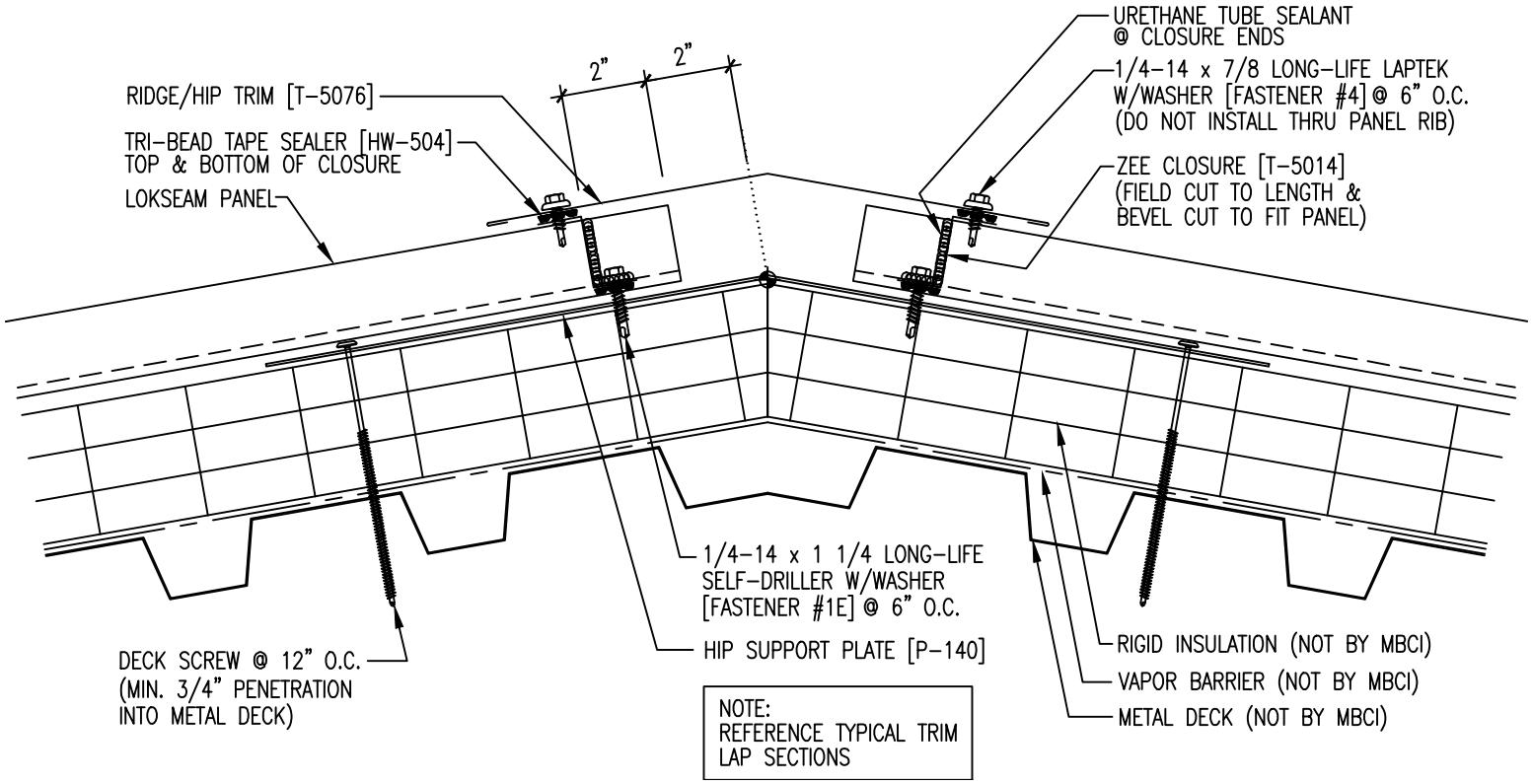
URETHANE TUBE SEALANT
@ CLOSURE ENDS
2"
2"
1/4-14 x 7/8 LONG-LIFE LAPTEK
W/WASHER [FASTENER #4] @ 6" O.C.
(DO NOT INSTALL THRU PANEL RIB)
RIDGE/HIP TRIM [T-5076]
TRI-BEAD TAPE SEALER [HW-504]
TOP & BOTTOM OF CLOSURE
ZEE CLOSURE [T-5014]
(FIELD CUT TO LENGTH &
BEVEL CUT TO FIT PANEL)
LOKSEAM PANEL
1/4-14 x 1 1/4 LONG-LIFE
SELF-DRILLER W/WASHER
[FASTENER #1E] @ 6" O.C.
RIGID INSULATION (NOT BY MBCI)
DECK SCREW @ 12" O.C.
(MIN. 3/4" PENETRATION
INTO METAL DECK)
HIP SUPPORT PLATE [P-140]
VAPOR BARRIER (NOT BY MBCI)
METAL DECK (NOT BY MBCI)
NOTE:
REFERENCE TYPICAL TRIM
LAP SECTIONS