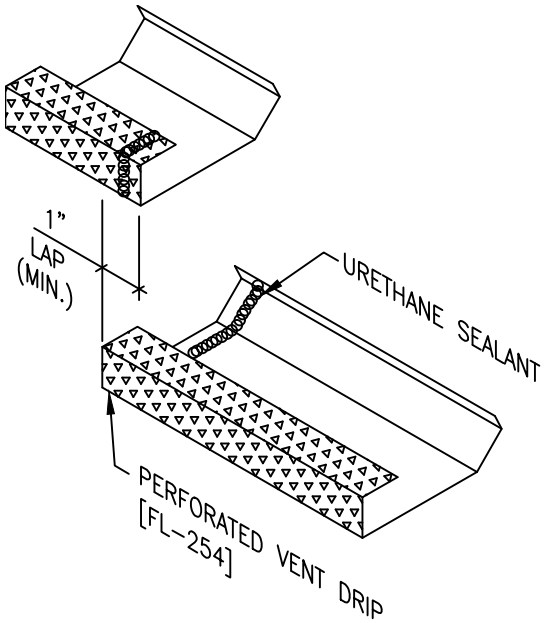
1"
LAP
(MIN.)
URETHANE SEALANT
PERFORATED VENT DRIP
[FL-254]

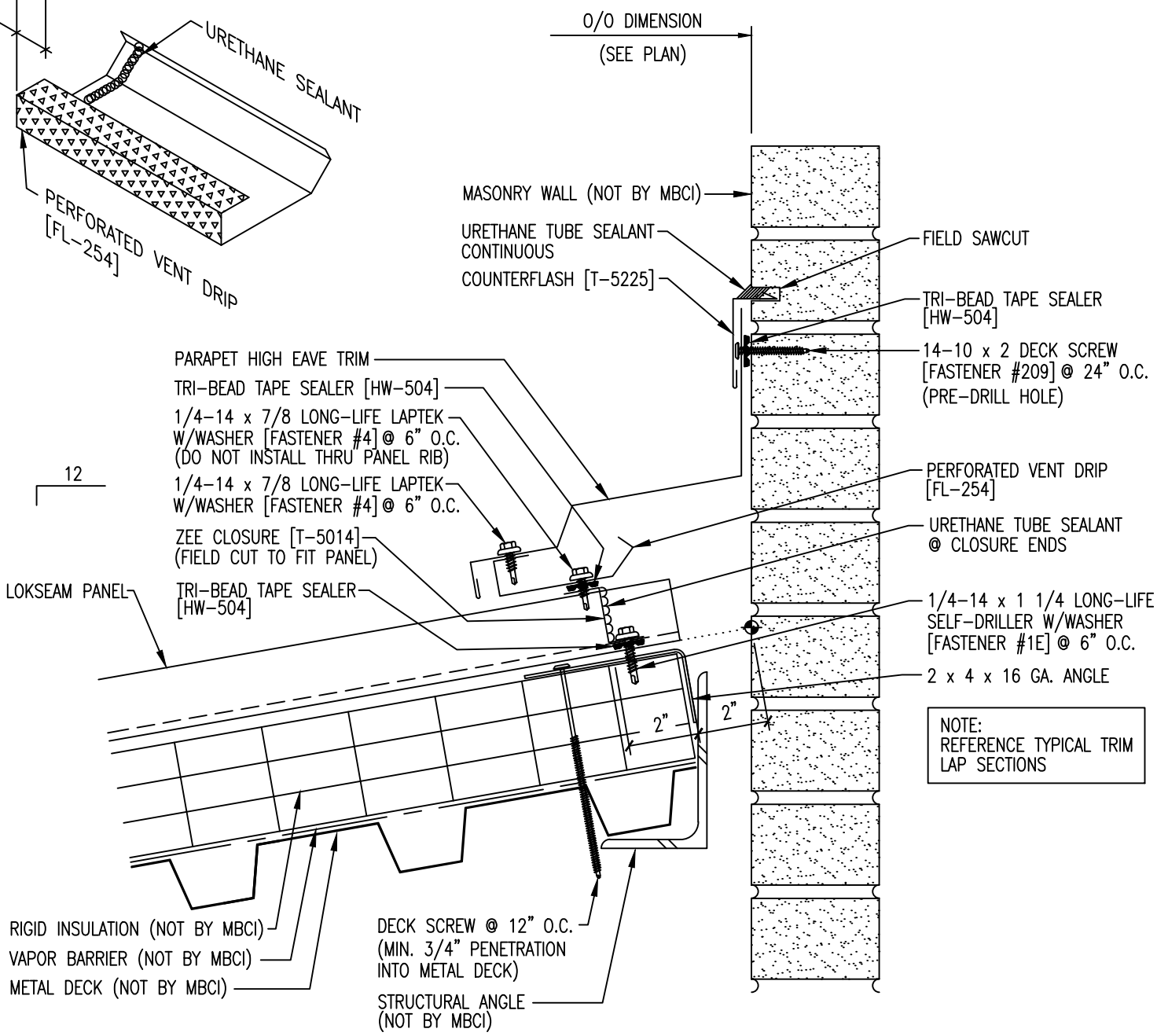
O/O DIMENSION
(SEE PLAN)
MASONRY WALL (NOT BY MBCI)
URETHANE TUBE SEALANT
CONTINUOUS
COUNTERFLASH [T-5225]
FIELD SAWCUT
TRI-BEAD TAPE SEALER
[HW-504]
14-10 x 2 DECK SCREW
[FASTENER #209] @ 24" O.C.
(PRE-DRILL HOLE)
PARAPET HIGH EAVE TRIM
TRI-BEAD TAPE SEALER [HW-504]
1/4-14 x 7/8 LONG-LIFE LAPTEK
W/WASHER [FASTENER #4] @ 6" O.C.
(DO NOT INSTALL THRU PANEL RIB)
12
1/4-14 x 7/8 LONG-LIFE LAPTEK
W/WASHER [FASTENER #4] @ 6" O.C.
PERFORATED VENT DRIP
[FL-254]
ZEE CLOSURE [T-5014]
(FIELD CUT TO FIT PANEL)
URETHANE TUBE SEALANT
@ CLOSURE ENDS
LOKSEAM PANEL
TRI-BEAD TAPE SEALER
[HW-504]
1/4-14 x 1 1/4 LONG-LIFE
SELF-DRILLER W/WASHER
[FASTENER #1E] @ 6" O.C.
2 x 4 x 16 GA. ANGLE
2"
2"
NOTE:
REFERENCE TYPICAL TRIM
LAP SECTIONS
RIGID INSULATION (NOT BY MBCI)
VAPOR BARRIER (NOT BY MBCI)
METAL DECK (NOT BY MBCI)
DECK SCREW @ 12" O.C.
(MIN. 3/4" PENETRATION
INTO METAL DECK)
STRUCTURAL ANGLE
(NOT BY MBCI)