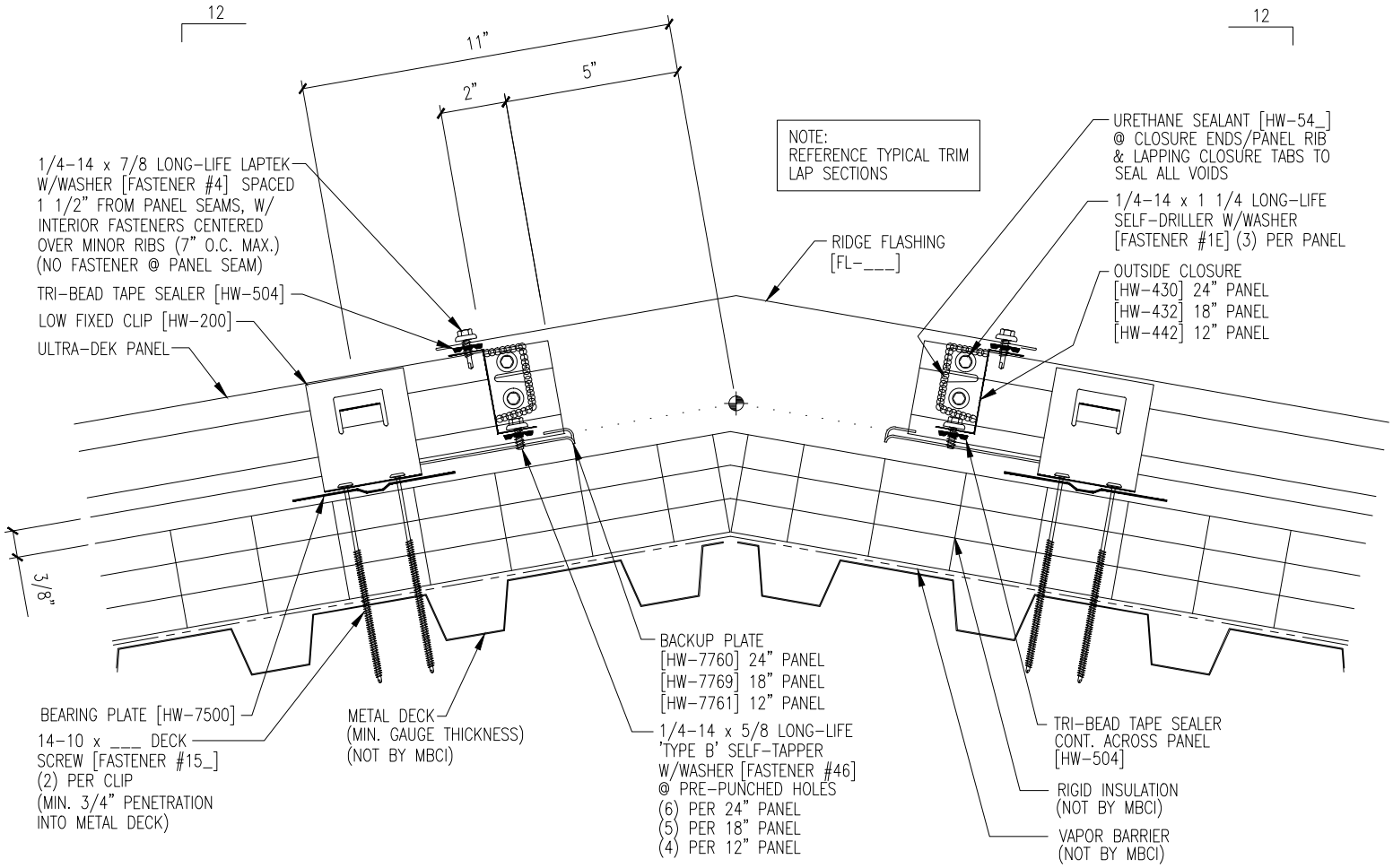
12
12
11"
5"
2"
NOTE:
REFERENCE TYPICAL TRIM
LAP SECTIONS
1/4-14 x 7/8 LONG-LIFE LAPTEK
W/WASHER [FASTENER #4] SPACED
1 1/2" FROM PANEL SEAMS, W/
INTERIOR FASTENERS CENTERED
OVER MINOR RIBS (7" O.C. MAX.)
(NO FASTENER @ PANEL SEAM)
TRI-BEAD TAPE SEALER [HW-504]
LOW FIXED CLIP [HW-200]
ULTRA-DEK PANEL
RIDGE FLASHING
[FL-___]
URETHANE SEALANT [HW-54_]
@ CLOSURE ENDS/PANEL RIB
& LAPPING CLOSURE TABS TO
SEAL ALL VOIDS
1/4-14 x 1 1/4 LONG-LIFE
SELF-DRILLER W/WASHER
[FASTENER #1E] (3) PER PANEL
OUTSIDE CLOSURE
[HW-430] 24" PANEL
[HW-432] 18" PANEL
[HW-442] 12" PANEL
3/8"
BACKUP PLATE
[HW-7760] 24" PANEL
[HW-7769] 18" PANEL
[HW-7761] 12" PANEL
BEARING PLATE [HW-7500]
14-10 x ___ DECK
SCREW [FASTENER #15_]
(2) PER CLIP
(MIN. 3/4" PENETRATION
INTO METAL DECK)
METAL DECK
(MIN. GAUGE THICKNESS)
(NOT BY MBCI)
1/4-14 x 5/8 LONG-LIFE
'TYPE B' SELF-TAPPER
W/WASHER [FASTENER #46]
@ PRE-PUNCHED HOLES
(6) PER 24" PANEL
(5) PER 18" PANEL
(4) PER 12" PANEL
TRI-BEAD TAPE SEALER
CONT. ACROSS PANEL
[HW-504]
RIGID INSULATION
(NOT BY MBCI)
VAPOR BARRIER
(NOT BY MBCI)