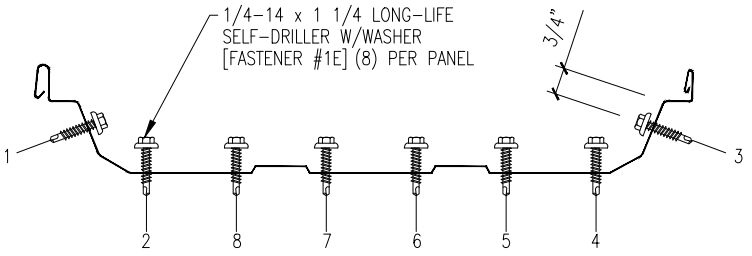
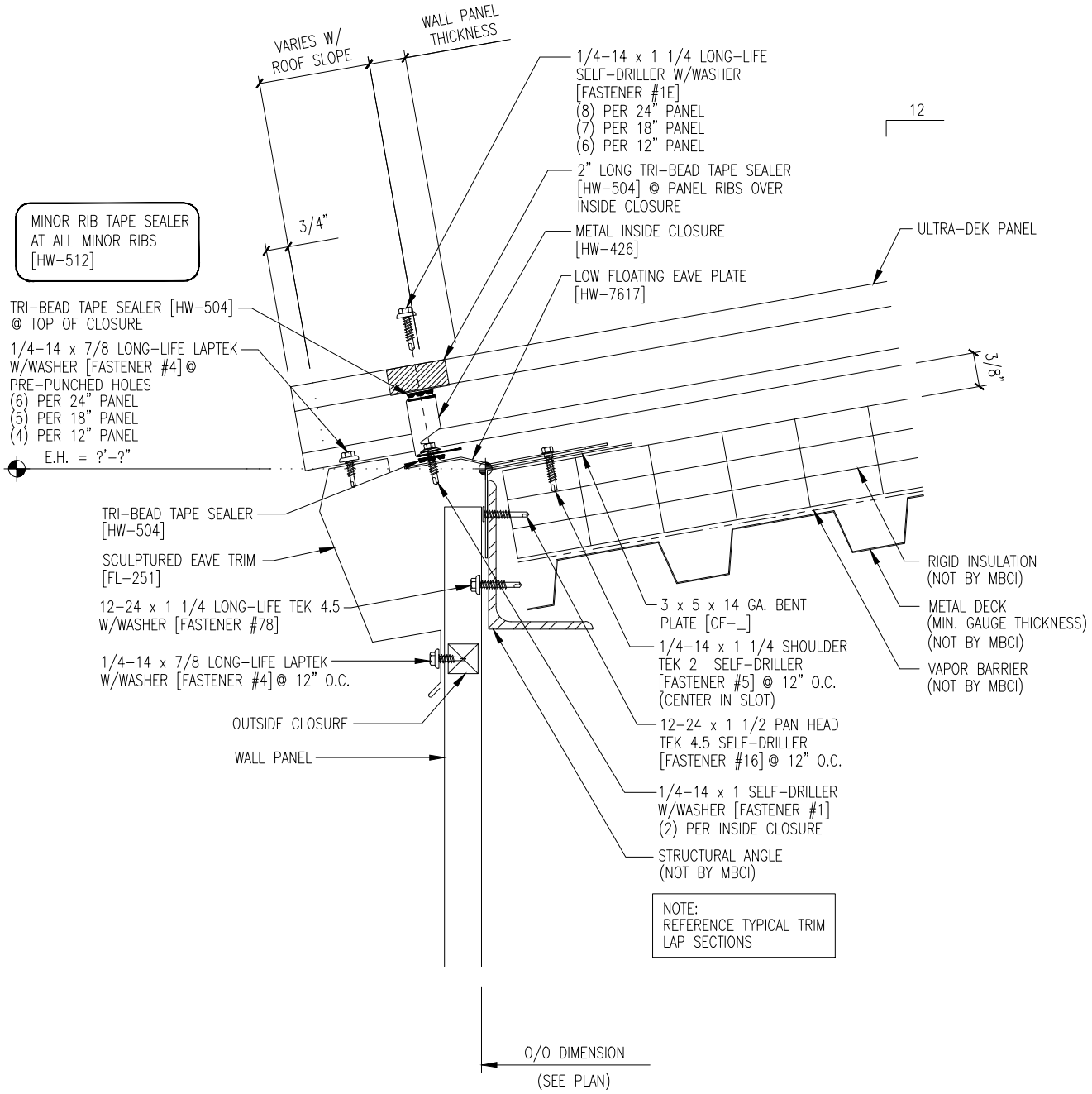
FASTENER SEQUENCE @ EAVE