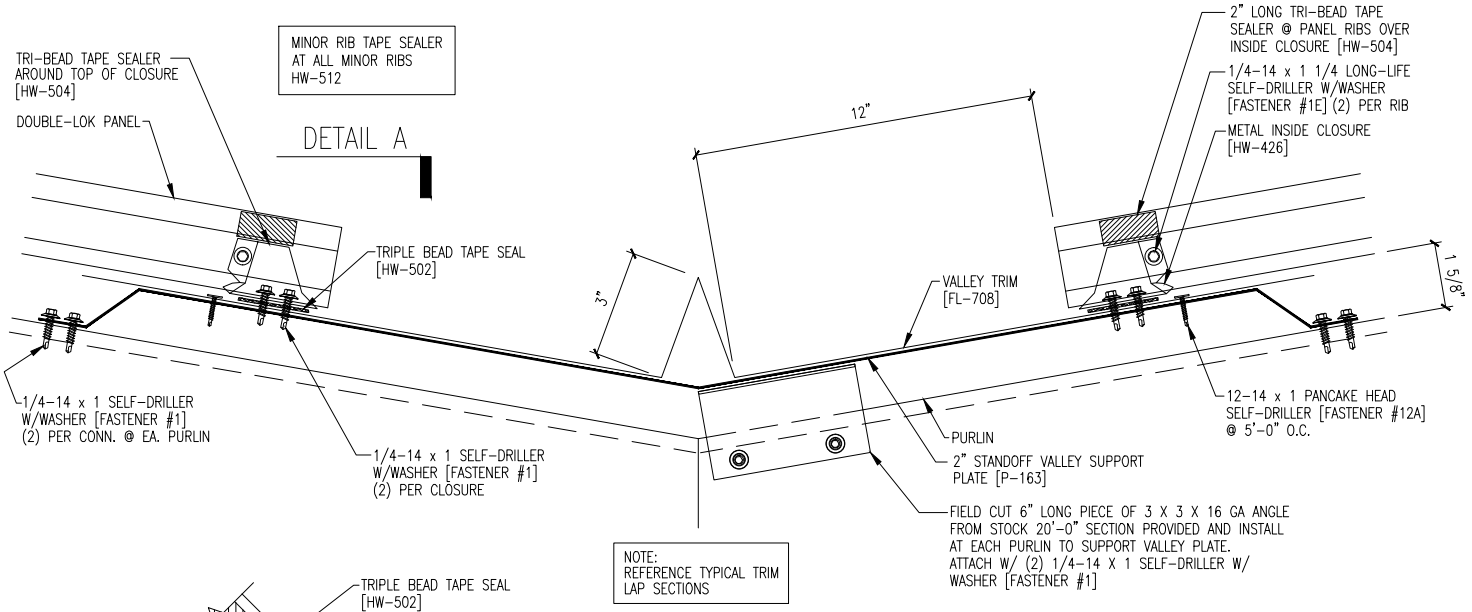
MINOR RIB TAPE SEALER
AT ALL MINOR RIBS
HW-512
DETAIL A
TRI-BEAD TAPE SEALER
AROUND TOP OF CLOSURE
[HW-504]
DOUBLE-LOK PANEL
TRIPLE BEAD TAPE SEAL
[HW-502]
1/4-14 x 1 SELF-DRILLER
W/WASHER [FASTENER #1]
(2) PER CONN. @ EA. PURLIN
1/4-14 x 1 SELF-DRILLER
W/WASHER [FASTENER #1]
(2) PER CLOSURE
3"
12"
VALLEY TRIM
[FL-708]
2" LONG TRI-BEAD TAPE
SEALER @ PANEL RIBS OVER
INSIDE CLOSURE [HW-504]
1/4-14 x 1 1/4 LONG-LIFE
SELF-DRILLER W/WASHER
[FASTENER #1E] (2) PER RIB
METAL INSIDE CLOSURE
[HW-426]
1 5/8"
12-14 x 1 PANCAKE HEAD
SELF-DRILLER [FASTENER #12A]
@ 5'-0" O.C.
PURLIN
2" STANDOFF VALLEY SUPPORT
PLATE [P-163]
FIELD CUT 6" LONG PIECE OF 3 X 3 X 16 GA ANGLE
FROM STOCK 20'-0" SECTION PROVIDED AND INSTALL
AT EACH PURLIN TO SUPPORT VALLEY PLATE.
ATTACH W/ (2) 1/4-14 X 1 SELF-DRILLER W/
WASHER [FASTENER #1]
NOTE:
REFERENCE TYPICAL TRIM
LAP SECTIONS

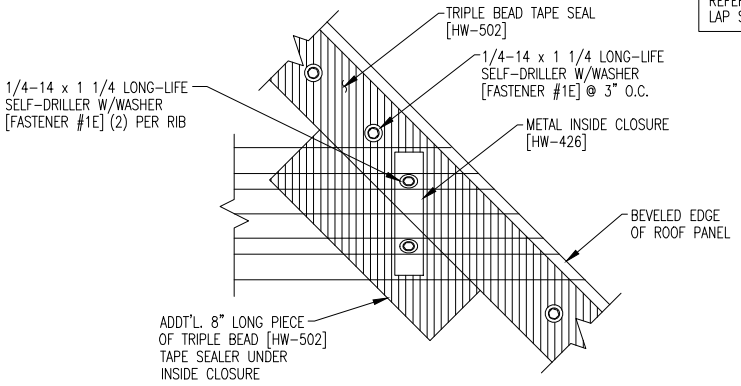
TRIPLE BEAD TAPE SEAL
[HW-502]
1/4-14 x 1 1/4 LONG-LIFE
SELF-DRILLER W/WASHER
[FASTENER #1E] @ 3" O.C.
1/4-14 x 1 1/4 LONG-LIFE
SELF-DRILLER W/WASHER
[FASTENER #1E] (2) PER RIB
METAL INSIDE CLOSURE
[HW-426]
BEVELED EDGE
OF ROOF PANEL
ADDT'L. 8" LONG PIECE
OF TRIPLE BEAD [HW-502]
TAPE SEALER UNDER
INSIDE CLOSURE

DETAIL "A"