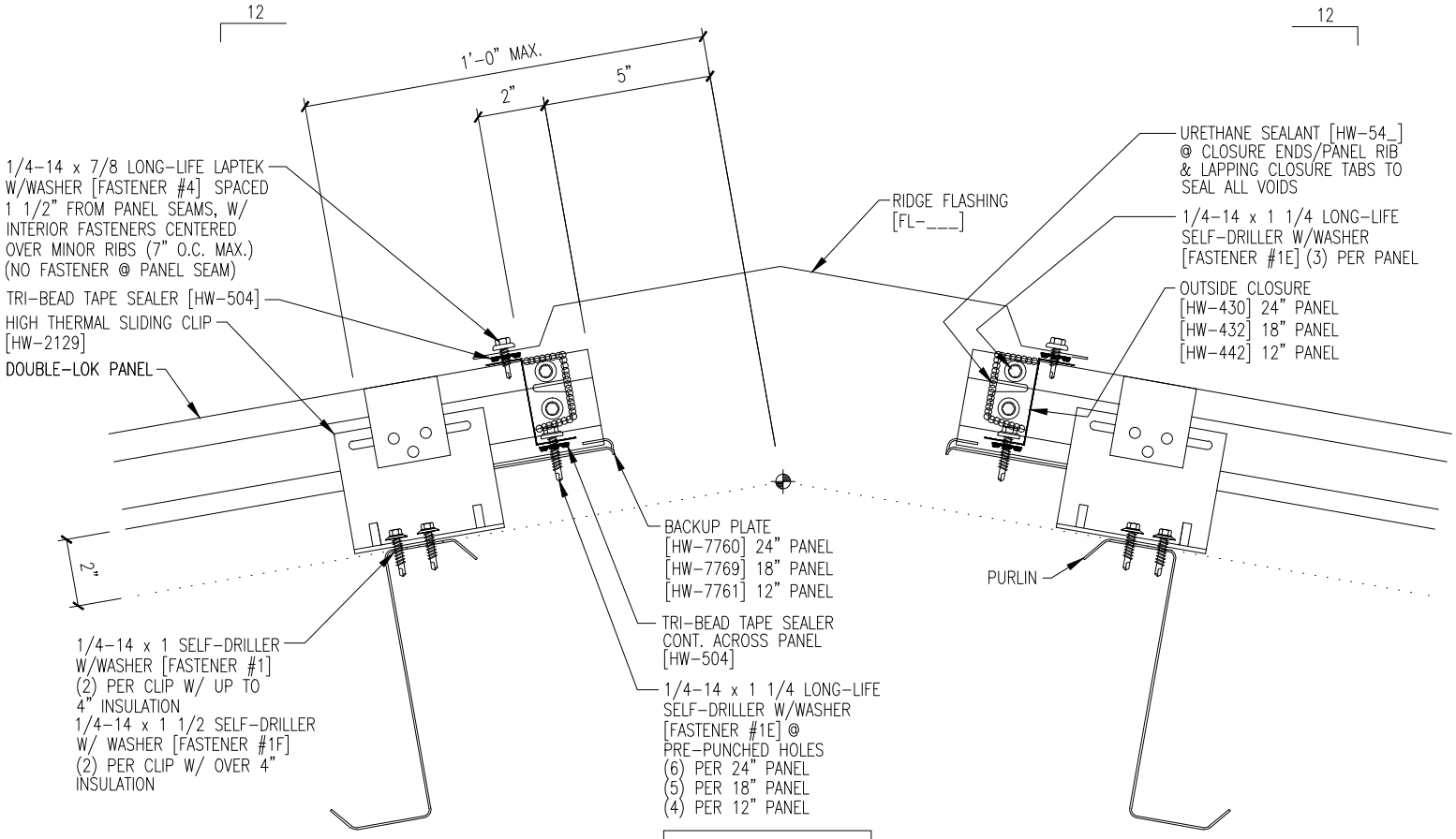
12
12
1'-0" MAX.
2"
5"
1/4-14 x 7/8 LONG-LIFE LAPTEK W/WASHER [FASTENER #4] SPACED 1 1/2" FROM PANEL SEAMS, W/ INTERIOR FASTENERS CENTERED OVER MINOR RIBS (7" O.C. MAX.) (NO FASTENER @ PANEL SEAM)
TRI-BEAD TAPE SEALER [HW-504]
HIGH THERMAL SLIDING CLIP [HW-2129]
DOUBLE-LOK PANEL
RIDGE FLASHING [FL-___]
URETHANE SEALANT [HW-54_] @ CLOSURE ENDS/PANEL RIB & LAPPING CLOSURE TABS TO SEAL ALL VOIDS
1/4-14 x 1 1/4 LONG-LIFE SELF-DRILLER W/WASHER [FASTENER #1E] (3) PER PANEL
OUTSIDE CLOSURE
[HW-430] 24" PANEL
[HW-432] 18" PANEL
[HW-442] 12" PANEL
2"
BACKUP PLATE
[HW-7760] 24" PANEL
[HW-7769] 18" PANEL
[HW-7761] 12" PANEL
PURLIN
TRI-BEAD TAPE SEALER CONT. ACROSS PANEL [HW-504]
1/4-14 x 1 SELF-DRILLER W/WASHER [FASTENER #1] (2) PER CLIP W/ UP TO 4" INSULATION
1/4-14 x 1 1/2 SELF-DRILLER W/ WASHER [FASTENER #1F] (2) PER CLIP W/ OVER 4" INSULATION
1/4-14 x 1 1/4 LONG-LIFE SELF-DRILLER W/WASHER [FASTENER #1E] @ PRE-PUNCHED HOLES
(6) PER 24" PANEL
(5) PER 18" PANEL
(4) PER 12" PANEL
NOTE:
REFERENCE TYPICAL TRIM LAP SECTIONS