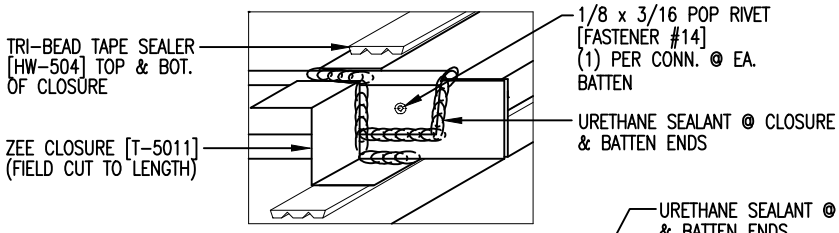
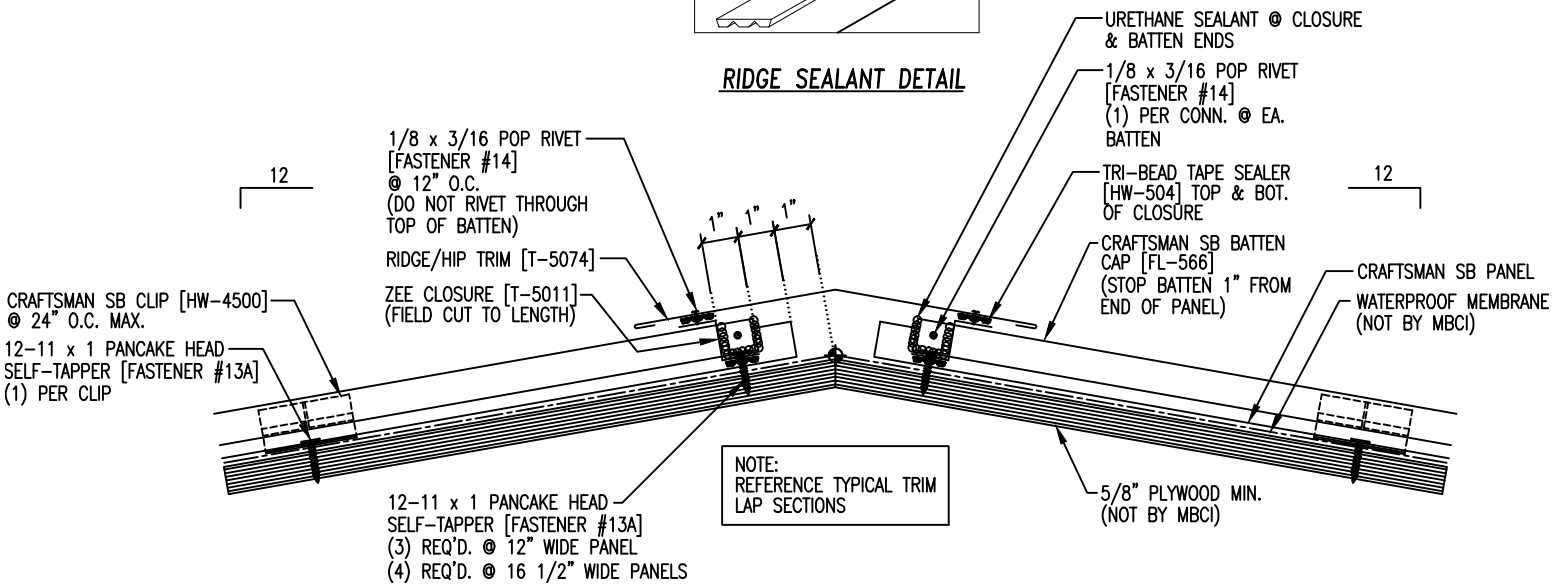
RIDGE SEALANT DETAIL