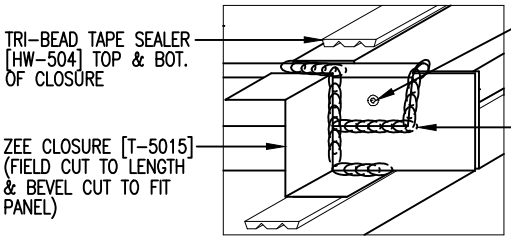

HIP SEALANT DETAIL

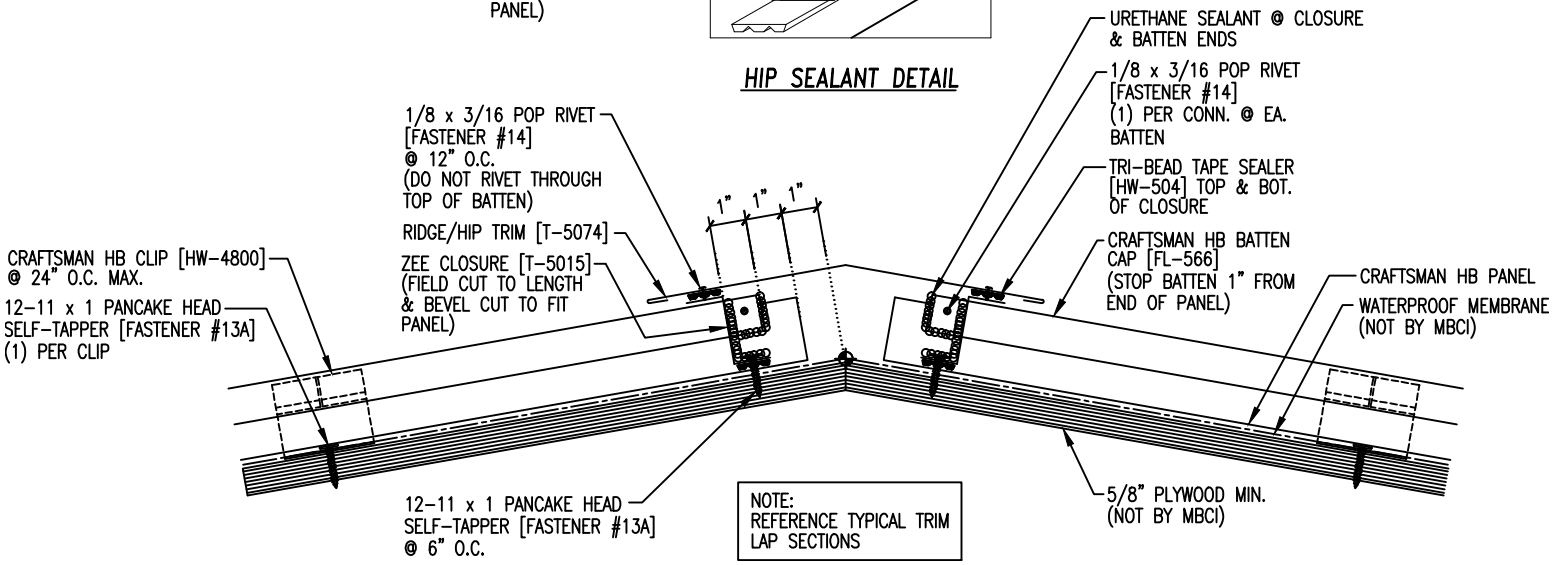

NOTE:
REFERENCE TYPICAL TRIM LAP SECTIONS