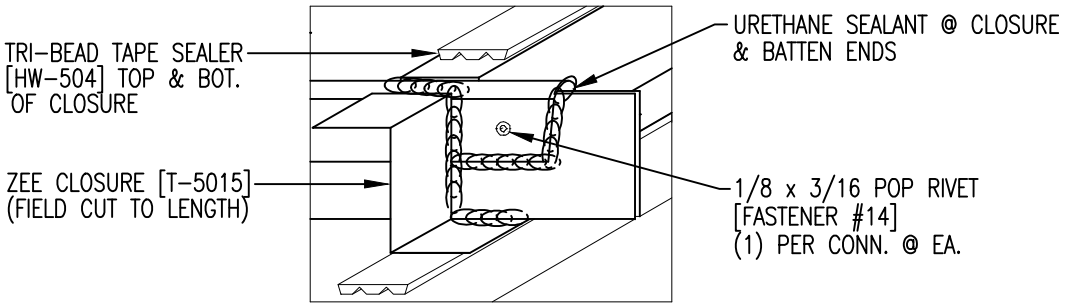

HIGH EAVE SEALANT DETAIL

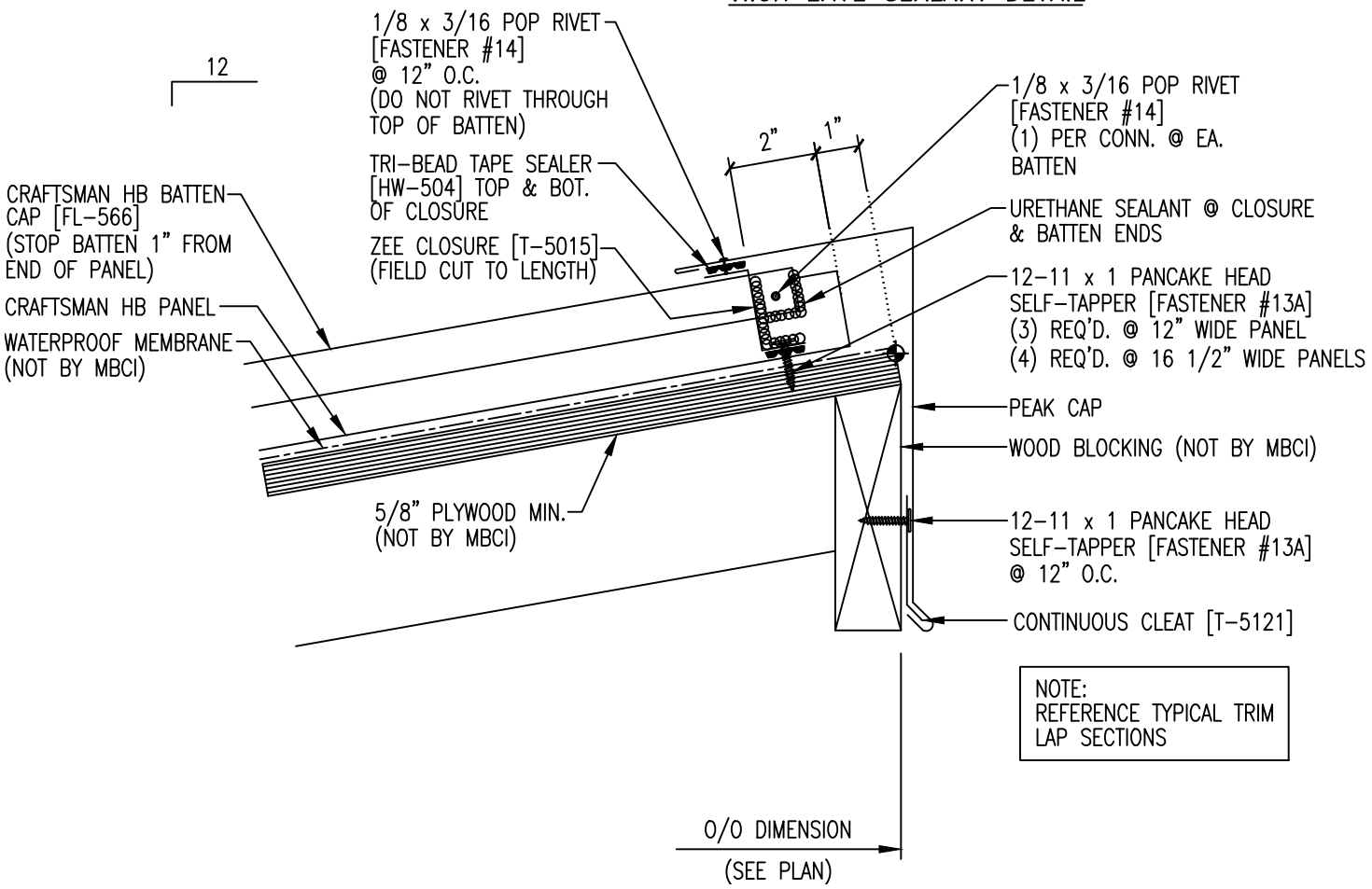

NOTE:
REFERENCE TYPICAL TRIM LAP SECTIONS