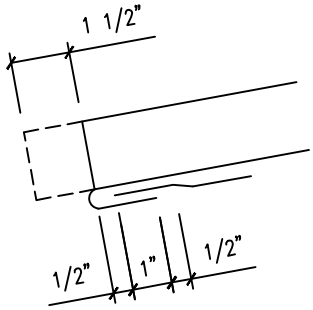

FIELD NOTCH PANEL LEGS AND BEND PAN TO FORM OPEN HEM
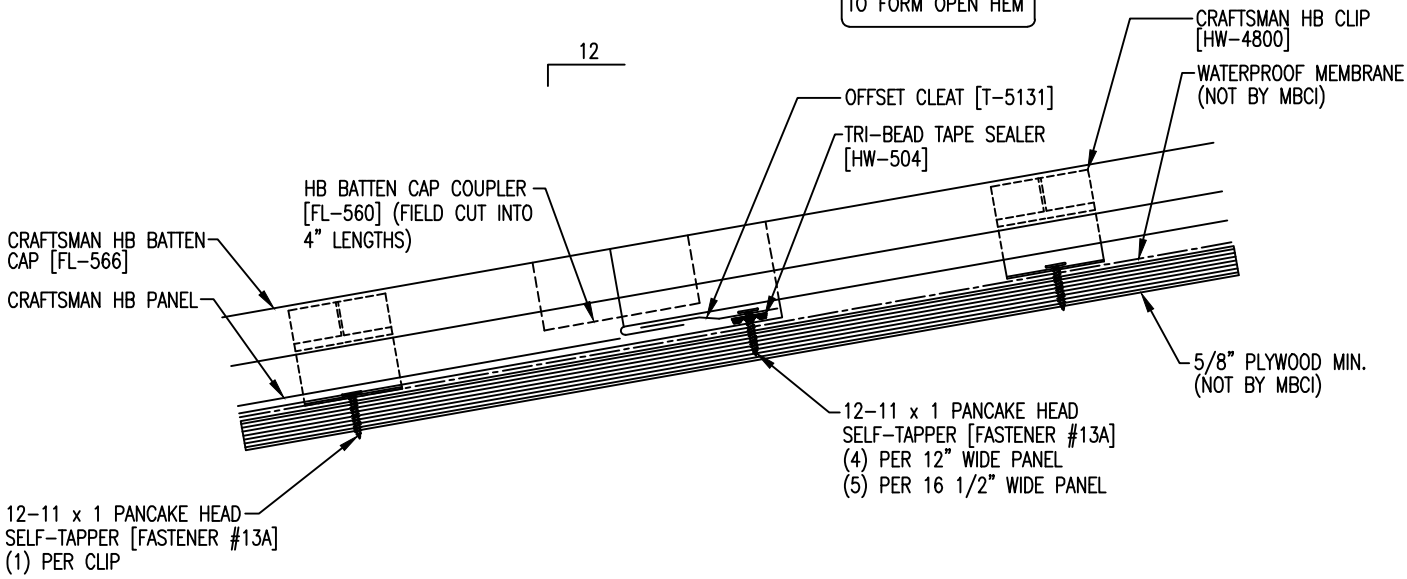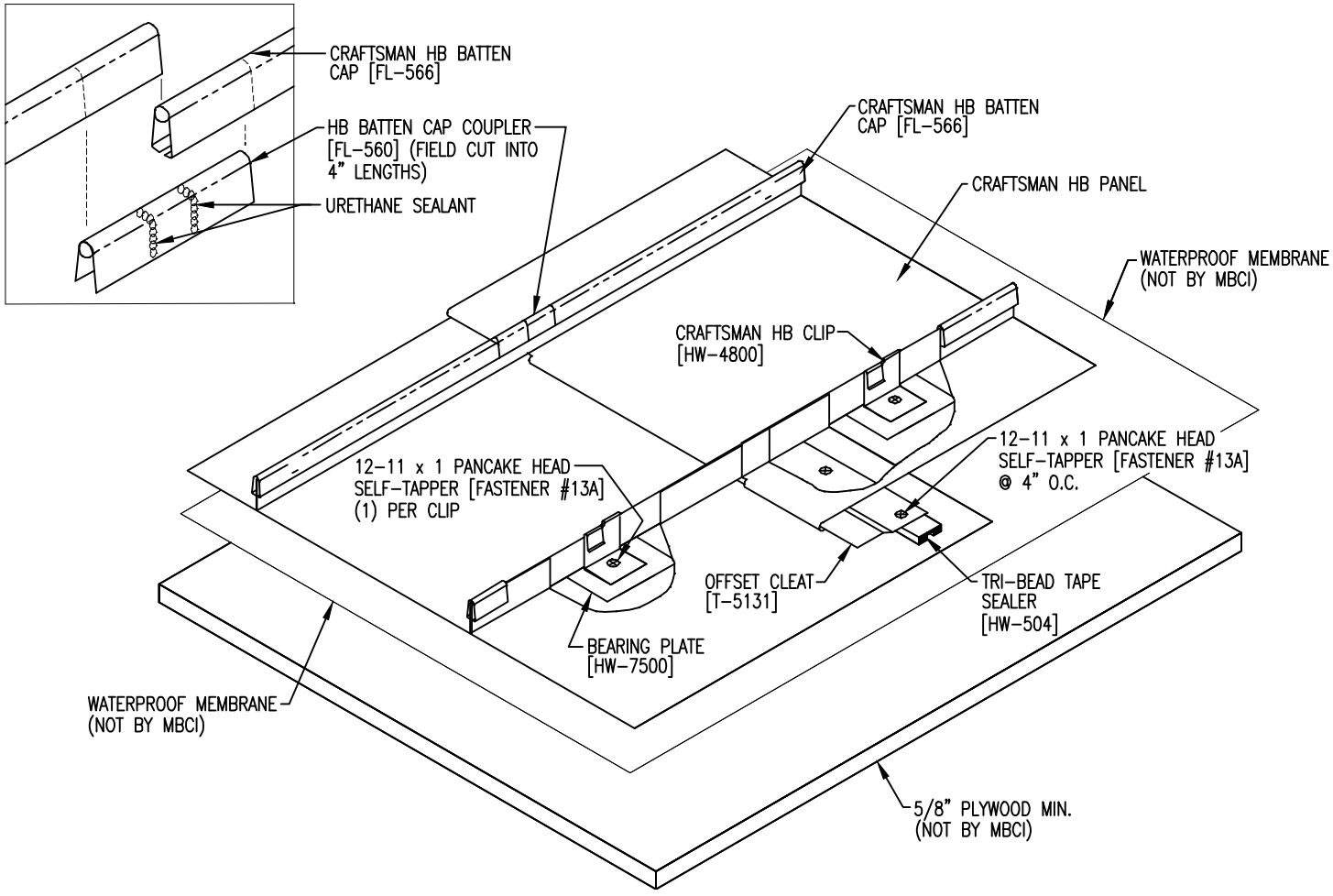
12