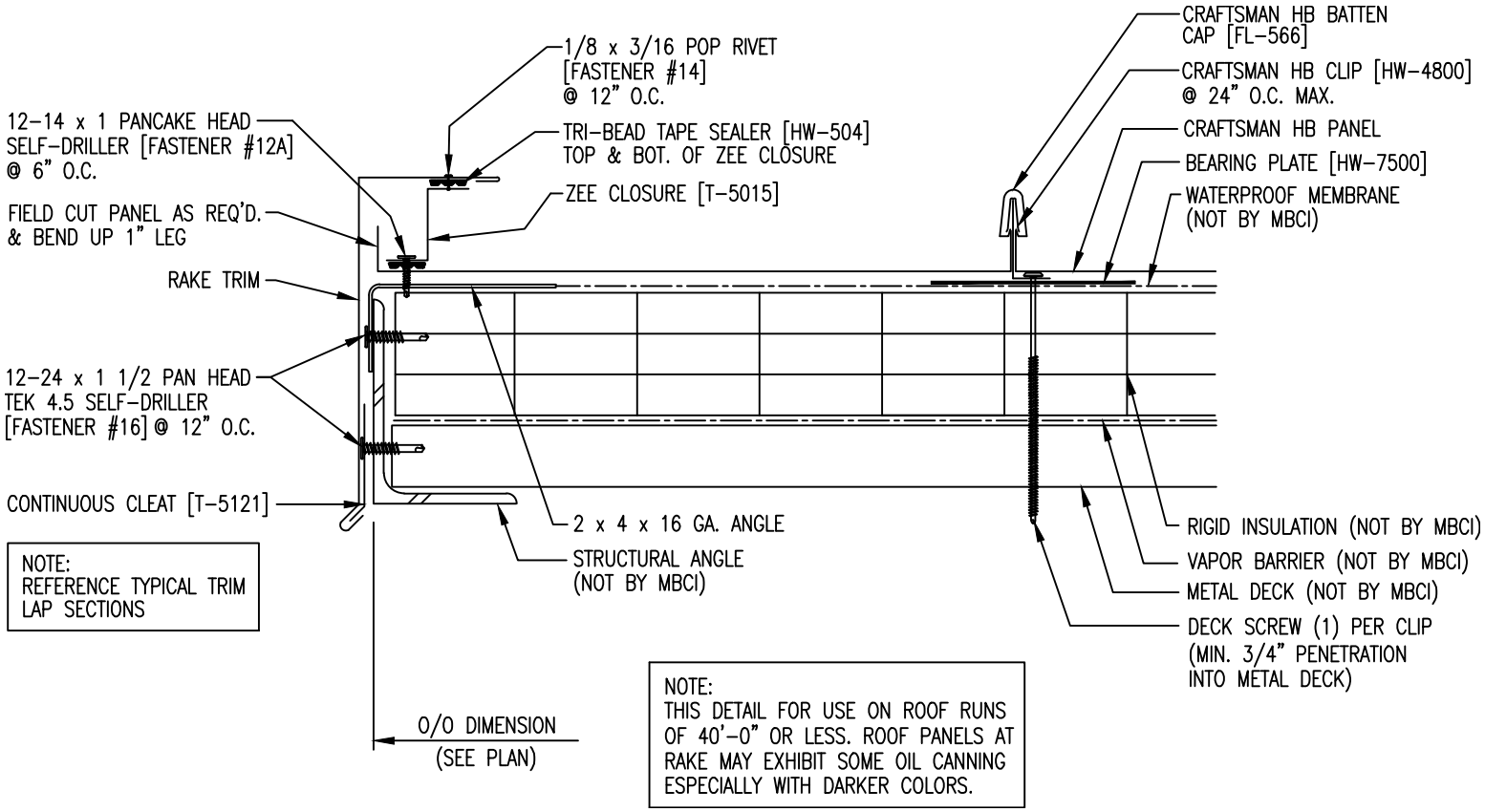

NOTE:
REFERENCE TYPICAL TRIM
LAP SECTIONS

NOTE:
THIS DETAIL FOR USE ON ROOF RUNS
OF 40'-0" OR LESS. ROOF PANELS AT
RAKE MAY EXHIBIT SOME OIL CANNING
ESPECIALLY WITH DARKER COLORS.