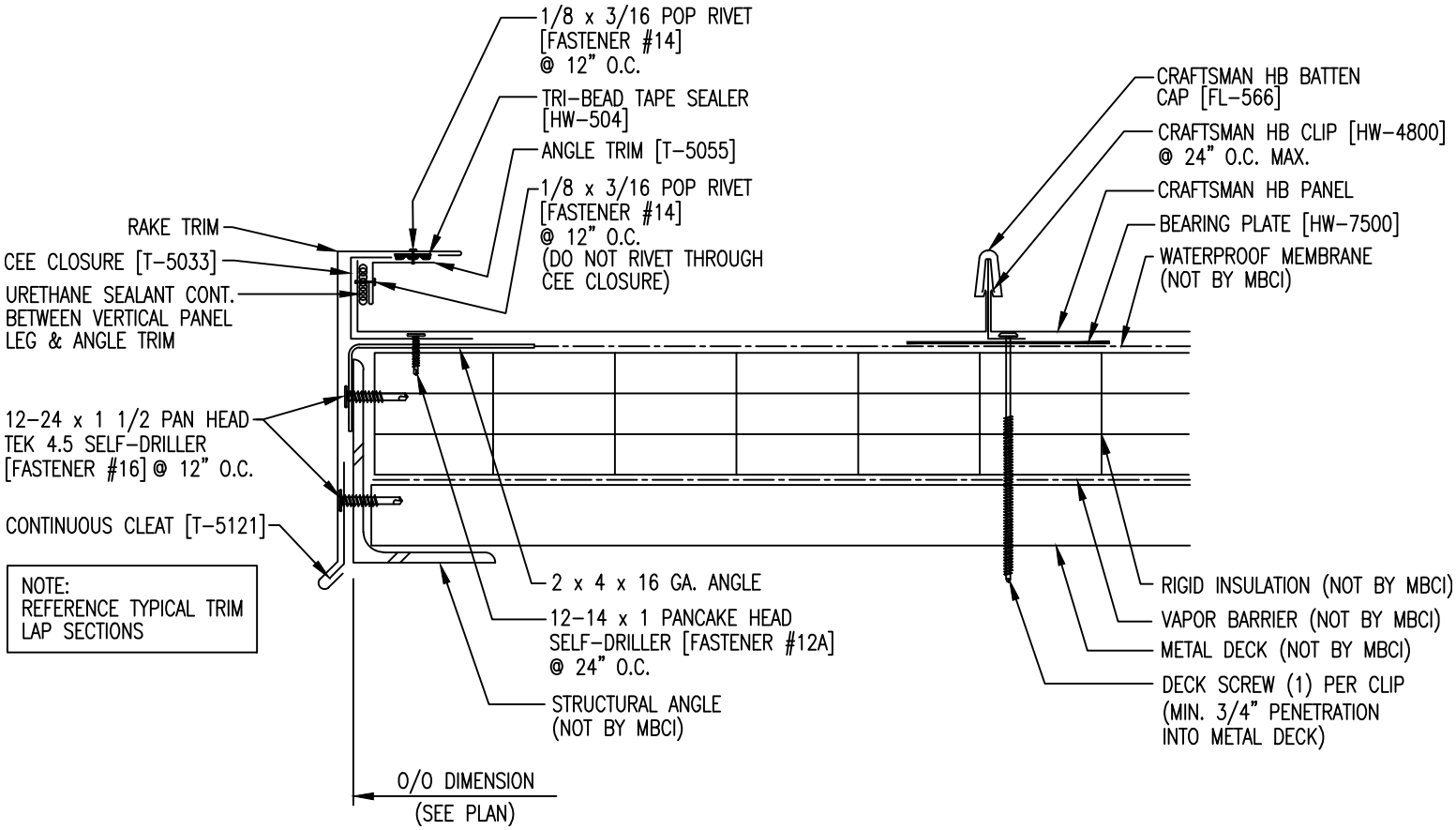
1/8 x 3/16 POP RIVET
[FASTENER #14]
@ 12" O.C.
TRI-BEAD TAPE SEALER
[HW-504]
ANGLE TRIM [T-5055]
1/8 x 3/16 POP RIVET
[FASTENER #14]
@ 12" O.C.
(DO NOT RIVET THROUGH
CEE CLOSURE)
RAKE TRIM
CEE CLOSURE [T-5033]
URETHANE SEALANT CONT.
BETWEEN VERTICAL PANEL
LEG & ANGLE TRIM
12-24 x 1 1/2 PAN HEAD
TEK 4.5 SELF-DRILLER
[FASTENER #16] @ 12" O.C.
CONTINUOUS CLEAT [T-5121]
NOTE:
REFERENCE TYPICAL TRIM
LAP SECTIONS
2 x 4 x 16 GA. ANGLE
12-14 x 1 PANCAKE HEAD
SELF-DRILLER [FASTENER #12A]
@ 24" O.C.
STRUCTURAL ANGLE
(NOT BY MBCI)
O/O DIMENSION
(SEE PLAN)
CRAFTSMAN HB BATTEN
CAP [FL-566]
CRAFTSMAN HB CLIP [HW-4800]
@ 24" O.C. MAX.
CRAFTSMAN HB PANEL
BEARING PLATE [HW-7500]
WATERPROOF MEMBRANE
(NOT BY MBCI)
RIGID INSULATION (NOT BY MBCI)
VAPOR BARRIER (NOT BY MBCI)
METAL DECK (NOT BY MBCI)
DECK SCREW (1) PER CLIP
(MIN. 3/4" PENETRATION
INTO METAL DECK)