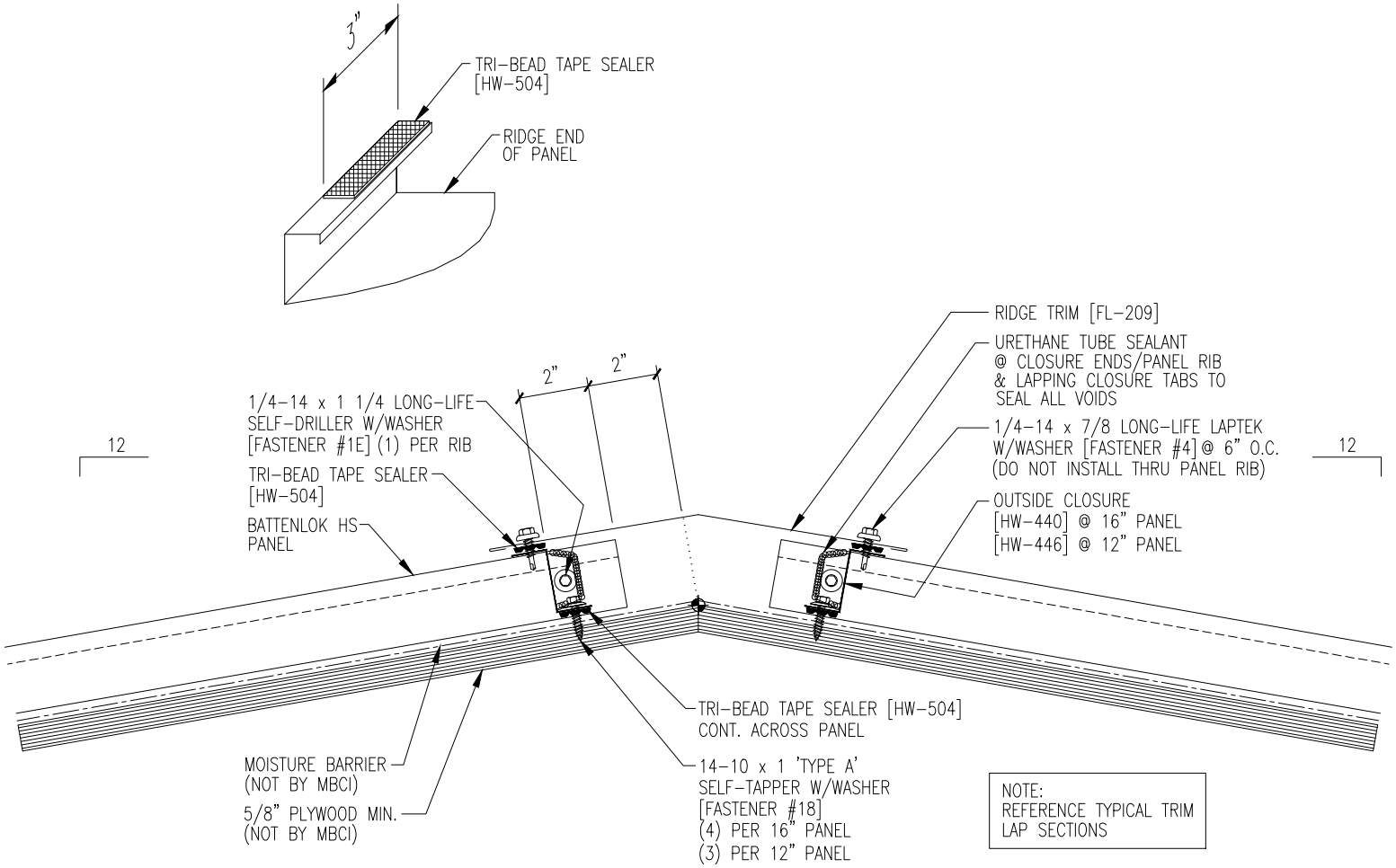
3"
TRI-BEAD TAPE SEALER [HW-504]
RIDGE END OF PANEL
RIDGE TRIM [FL-209]
URETHANE TUBE SEALANT @ CLOSURE ENDS/PANEL RIB & LAPPING CLOSURE TABS TO SEAL ALL VOIDS
2"
2"
1/4-14 x 1 1/4 LONG-LIFE SELF-DRILLER W/WASHER [FASTENER #1E] (1) PER RIB
12
1/4-14 x 7/8 LONG-LIFE LAPTEK W/WASHER [FASTENER #4] @ 6" O.C. (DO NOT INSTALL THRU PANEL RIB)
12
TRI-BEAD TAPE SEALER [HW-504]
OUTSIDE CLOSURE [HW-440] @ 16" PANEL [HW-446] @ 12" PANEL
BATTENLOK HS PANEL
TRI-BEAD TAPE SEALER [HW-504] CONT. ACROSS PANEL
MOISTURE BARRIER (NOT BY MBCI)
5/8" PLYWOOD MIN. (NOT BY MBCI)
14-10 x 1 'TYPE A' SELF-TAPPER W/WASHER [FASTENER #18] (4) PER 16" PANEL (3) PER 12" PANEL
NOTE: REFERENCE TYPICAL TRIM LAP SECTIONS