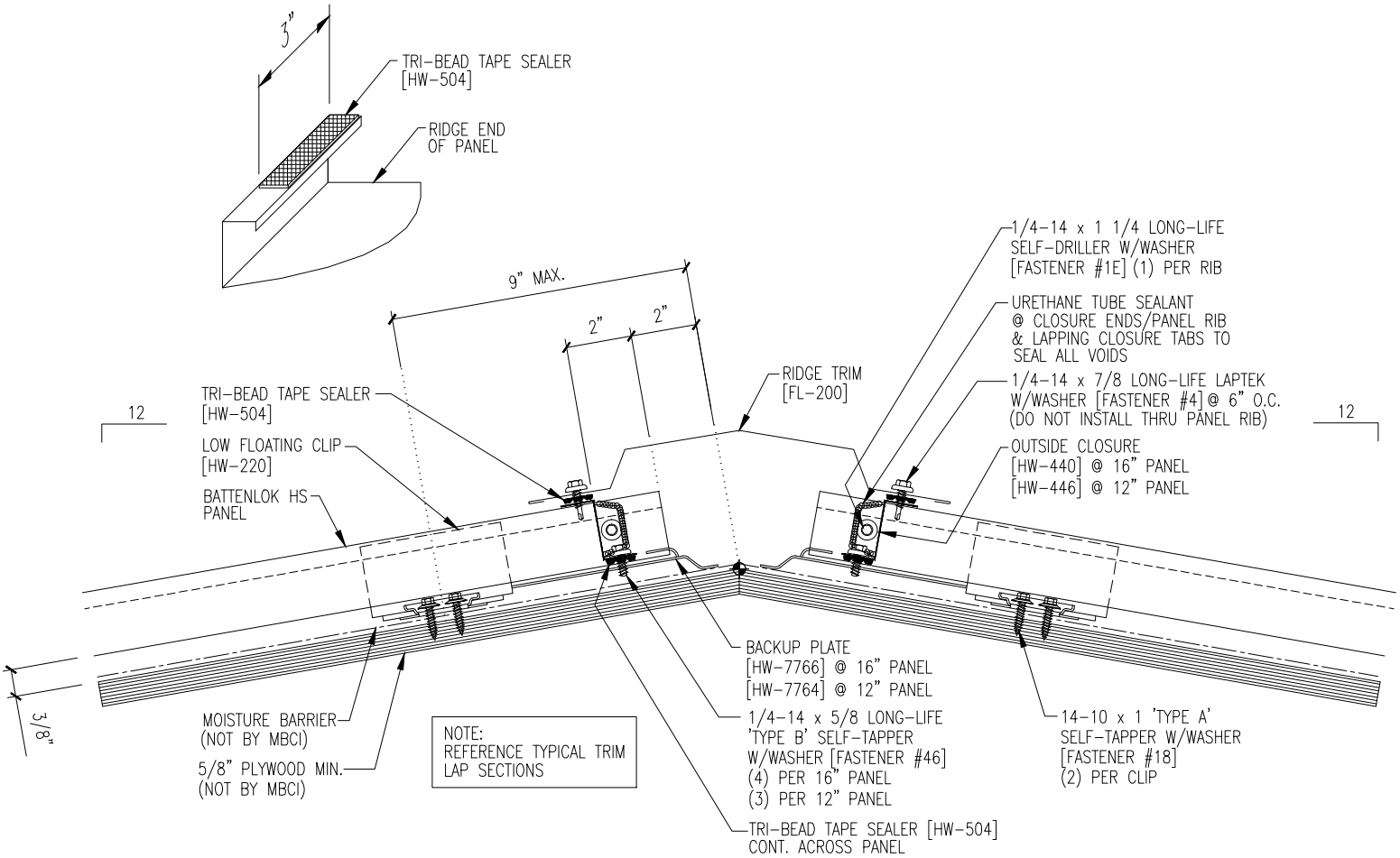
3"
TRI-BEAD TAPE SEALER [HW-504]
RIDGE END OF PANEL
9" MAX.
2"
2"
1/4-14 x 1 1/4 LONG-LIFE SELF-DRILLER W/WASHER [FASTENER #1E] (1) PER RIB
URETHANE TUBE SEALANT @ CLOSURE ENDS/PANEL RIB & LAPPING CLOSURE TABS TO SEAL ALL VOIDS
RIDGE TRIM [FL-200]
1/4-14 x 7/8 LONG-LIFE LAPTEK W/WASHER [FASTENER #4] @ 6" O.C. (DO NOT INSTALL THRU PANEL RIB)
12
12
TRI-BEAD TAPE SEALER [HW-504]
LOW FLOATING CLIP [HW-220]
BATTENLOK HS PANEL
OUTSIDE CLOSURE [HW-440] @ 16" PANEL [HW-446] @ 12" PANEL
BACKUP PLATE [HW-7766] @ 16" PANEL [HW-7764] @ 12" PANEL
3/8"
MOISTURE BARRIER (NOT BY MBCI)
5/8" PLYWOOD MIN. (NOT BY MBCI)
NOTE: REFERENCE TYPICAL TRIM LAP SECTIONS
1/4-14 x 5/8 LONG-LIFE 'TYPE B' SELF-TAPPER W/WASHER [FASTENER #46] (4) PER 16" PANEL (3) PER 12" PANEL
14-10 x 1 'TYPE A' SELF-TAPPER W/WASHER [FASTENER #18] (2) PER CLIP
TRI-BEAD TAPE SEALER [HW-504] CONT. ACROSS PANEL