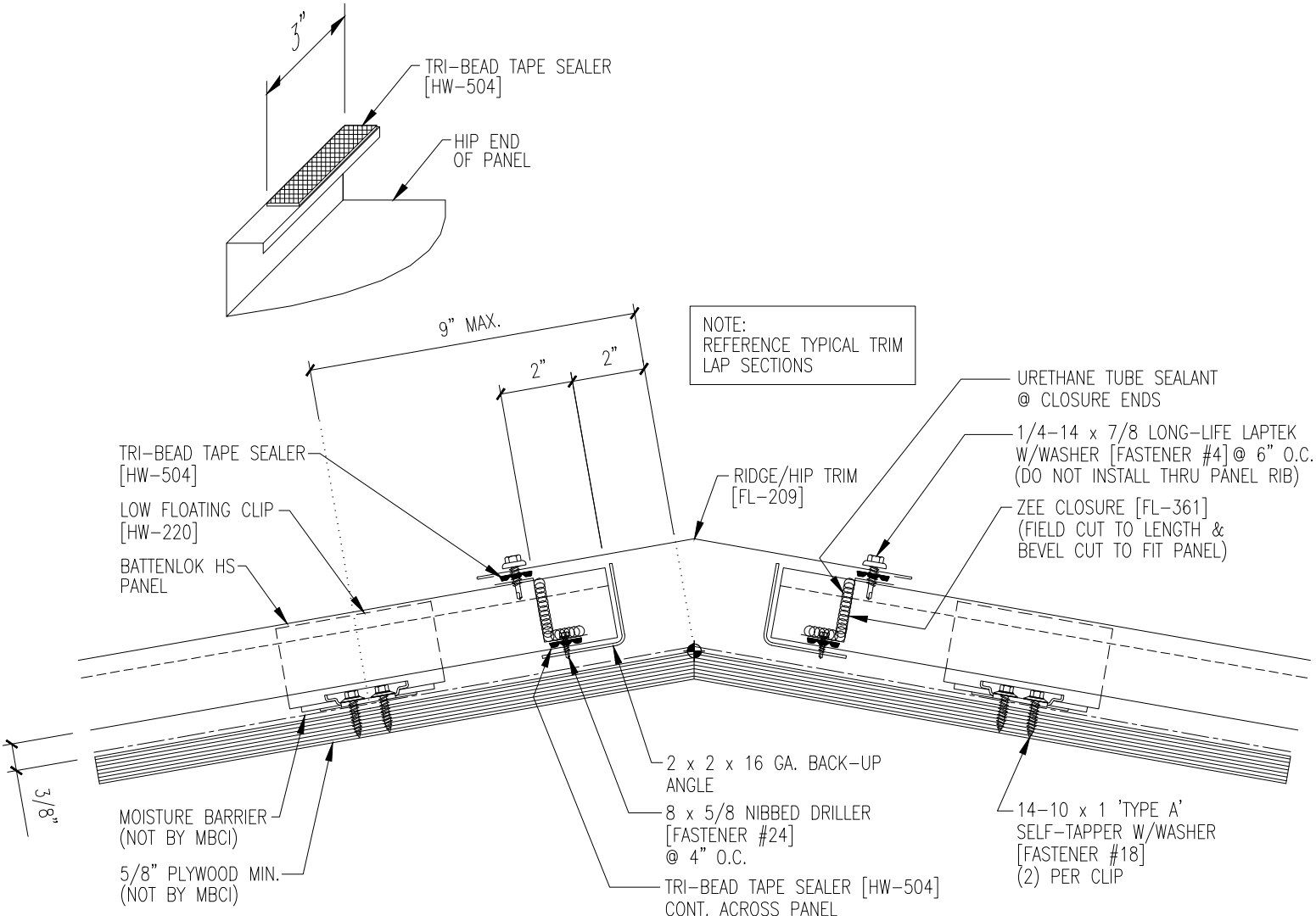
3"
TRI-BEAD TAPE SEALER [HW-504]
HIP END OF PANEL
9" MAX.
2"
2"
NOTE:
REFERENCE TYPICAL TRIM LAP SECTIONS
URETHANE TUBE SEALANT @ CLOSURE ENDS
1/4-14 x 7/8 LONG-LIFE LAPTEK W/WASHER [FASTENER #4] @ 6" O.C. (DO NOT INSTALL THRU PANEL RIB)
TRI-BEAD TAPE SEALER [HW-504]
RIDGE/HIP TRIM [FL-209]
LOW FLOATING CLIP [HW-220]
ZEE CLOSURE [FL-361] (FIELD CUT TO LENGTH & BEVEL CUT TO FIT PANEL)
BATTENLOK HS PANEL
2 x 2 x 16 GA. BACK-UP ANGLE
3/8"
MOISTURE BARRIER (NOT BY MBCI)
8 x 5/8 NIBBED DRILLER [FASTENER #24] @ 4" O.C.
14-10 x 1 'TYPE A' SELF-TAPPER W/WASHER [FASTENER #18] (2) PER CLIP
5/8" PLYWOOD MIN. (NOT BY MBCI)
TRI-BEAD TAPE SEALER [HW-504] CONT. ACROSS PANEL