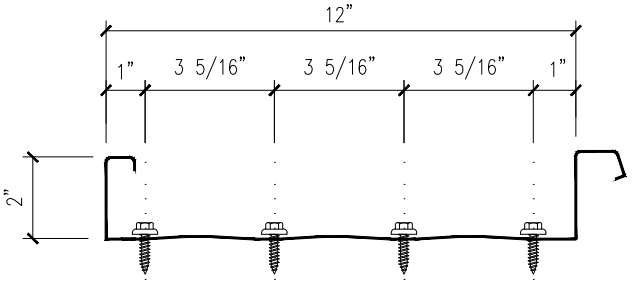

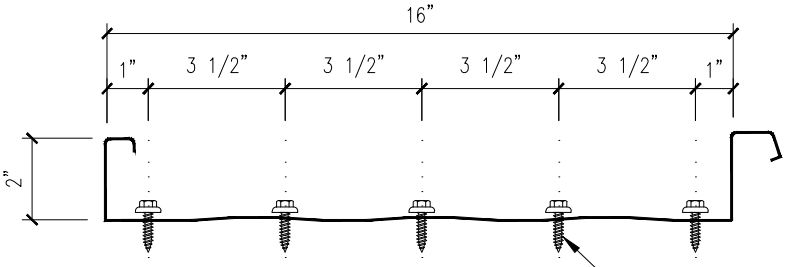

FASTENER SPACING @ EAVE

1/4-14 x 1 LONG-LIFE 'TYPE AB' SELF-TAPPER W/WASHER [FASTENER #2B]

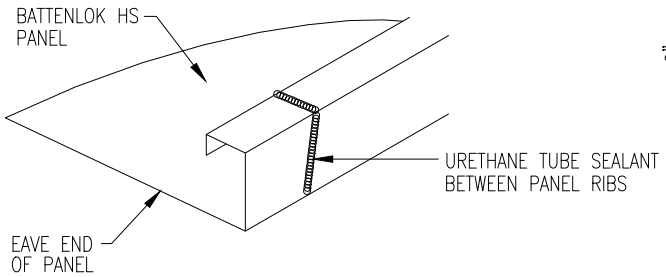

EAVE SEALANT DETAIL
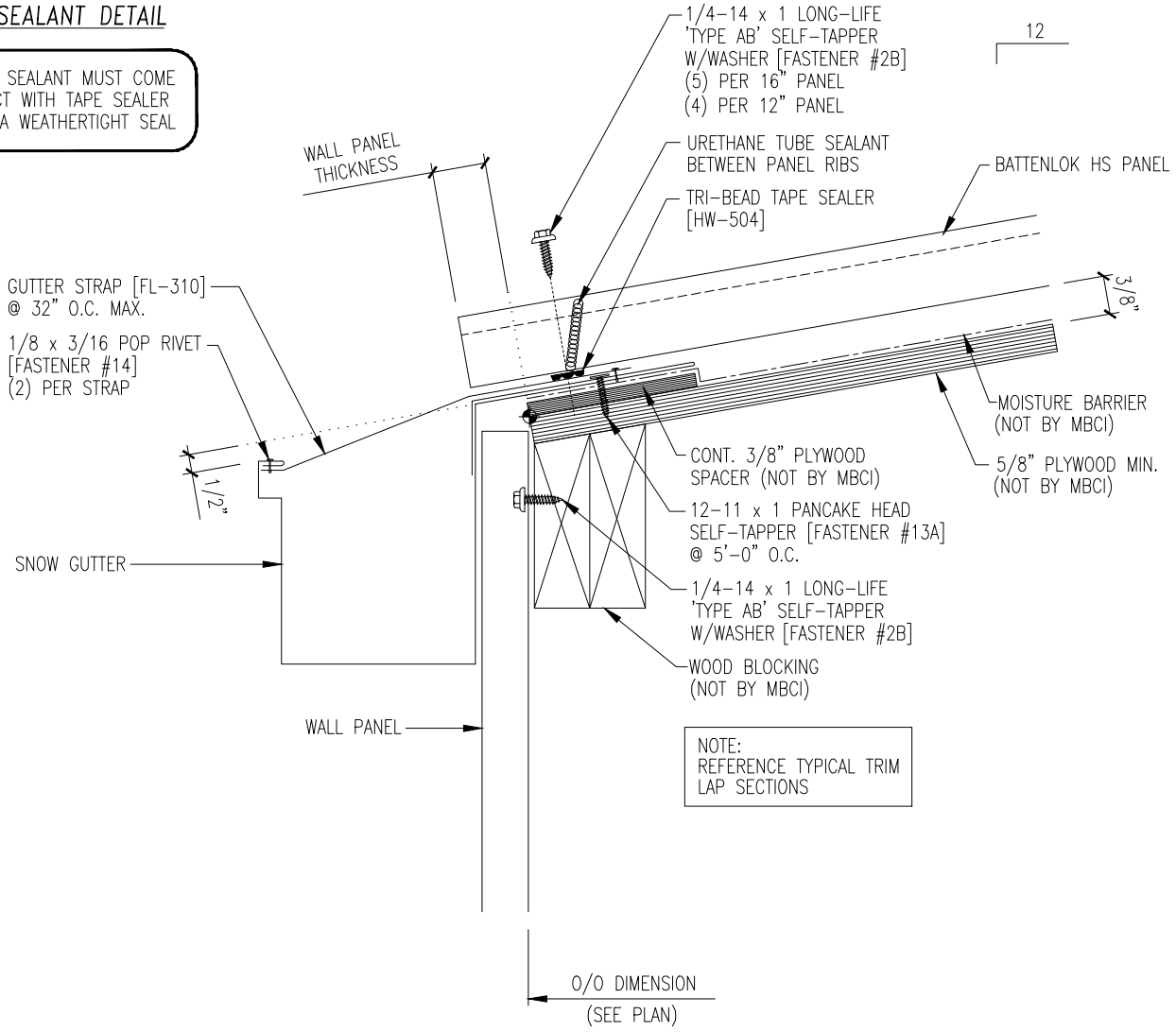
URETHANE SEALANT MUST COME IN CONTACT WITH TAPE SEALER TO FORM A WEATHERTIGHT SEAL