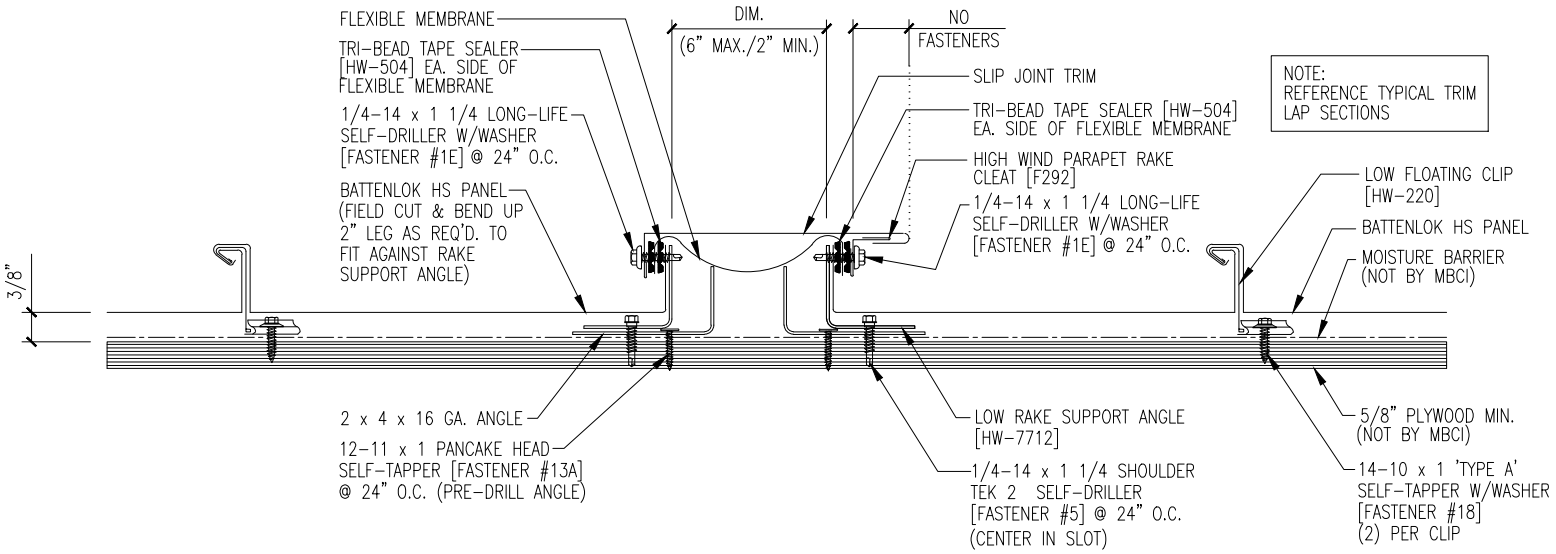
FLEXIBLE MEMBRANE
TRI-BEAD TAPE SEALER [HW-504] EA. SIDE OF FLEXIBLE MEMBRANE
1/4-14 x 1 1/4 LONG-LIFE SELF-DRILLER W/WASHER [FASTENER #1E] @ 24" O.C.
BATTENLOK HS PANEL (FIELD CUT & BEND UP 2" LEG AS REQ'D. TO FIT AGAINST RAKE SUPPORT ANGLE)
3/8"
DIM.
(6" MAX./2" MIN.)
NO FASTENERS
SLIP JOINT TRIM
TRI-BEAD TAPE SEALER [HW-504] EA. SIDE OF FLEXIBLE MEMBRANE
HIGH WIND PARAPET RAKE CLEAT [F292]
1/4-14 x 1 1/4 LONG-LIFE SELF-DRILLER W/WASHER [FASTENER #1E] @ 24" O.C.
NOTE: REFERENCE TYPICAL TRIM LAP SECTIONS
LOW FLOATING CLIP [HW-220]
BATTENLOK HS PANEL
MOISTURE BARRIER (NOT BY MBCI)
2 x 4 x 16 GA. ANGLE
12-11 x 1 PANCAKE HEAD SELF-TAPPER [FASTENER #13A] @ 24" O.C. (PRE-DRILL ANGLE)
LOW RAKE SUPPORT ANGLE [HW-7712]
1/4-14 x 1 1/4 SHOULDER TEK 2 SELF-DRILLER [FASTENER #5] @ 24" O.C. (CENTER IN SLOT)
5/8" PLYWOOD MIN. (NOT BY MBCI)
14-10 x 1 'TYPE A' SELF-TAPPER W/WASHER [FASTENER #18] (2) PER CLIP