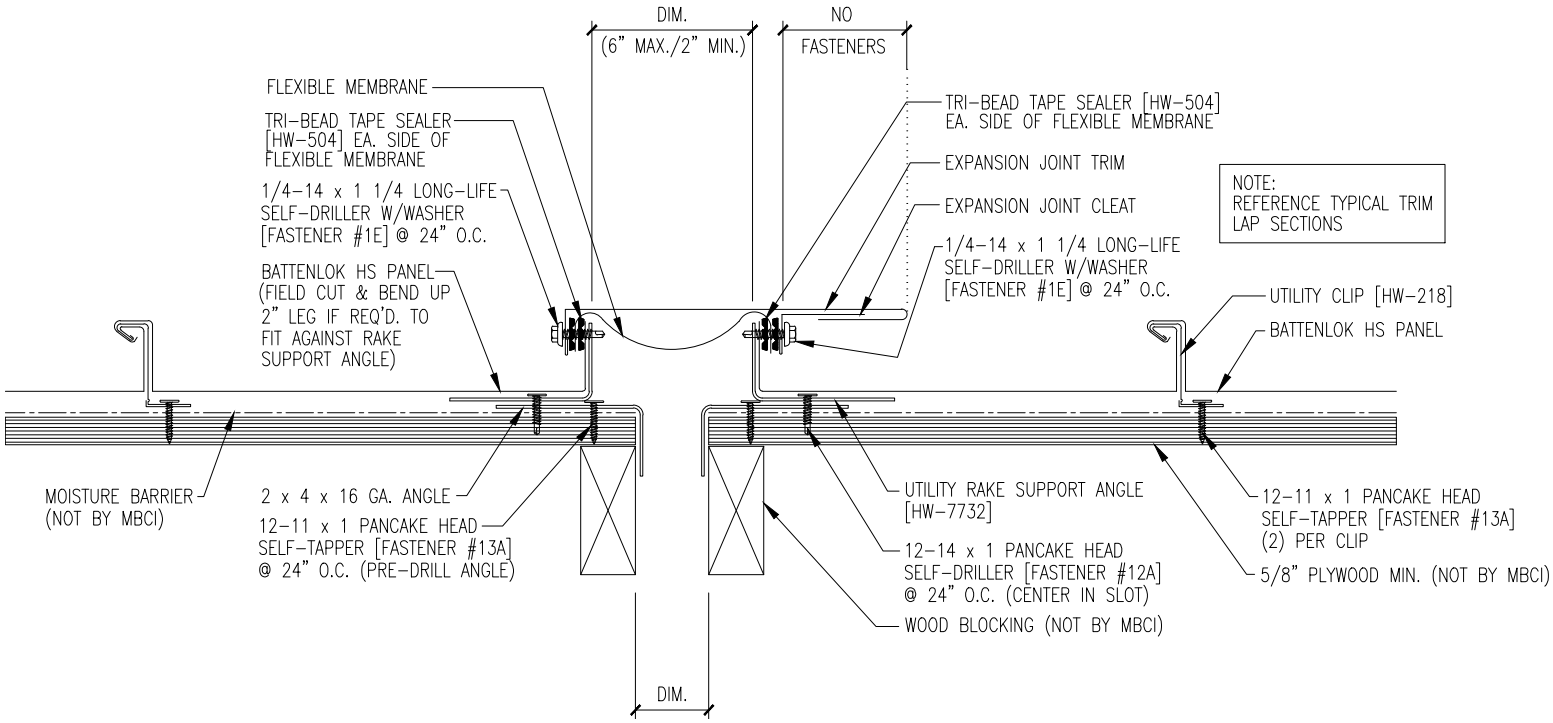
DIM.
(6" MAX./2" MIN.)
NO
FASTENERS
FLEXIBLE MEMBRANE
TRI-BEAD TAPE SEALER [HW-504] EA. SIDE OF FLEXIBLE MEMBRANE
1/4-14 x 1 1/4 LONG-LIFE SELF-DRILLER W/WASHER [FASTENER #1E] @ 24" O.C.
BATTENLOK HS PANEL (FIELD CUT & BEND UP 2" LEG IF REQ'D. TO FIT AGAINST RAKE SUPPORT ANGLE)
TRI-BEAD TAPE SEALER [HW-504] EA. SIDE OF FLEXIBLE MEMBRANE
EXPANSION JOINT TRIM
EXPANSION JOINT CLEAT
1/4-14 x 1 1/4 LONG-LIFE SELF-DRILLER W/WASHER [FASTENER #1E] @ 24" O.C.
NOTE:
REFERENCE TYPICAL TRIM LAP SECTIONS
UTILITY CLIP [HW-218]
BATTENLOK HS PANEL
MOISTURE BARRIER (NOT BY MBCI)
2 x 4 x 16 GA. ANGLE
12-11 x 1 PANCAKE HEAD SELF-TAPPER [FASTENER #13A] @ 24" O.C. (PRE-DRILL ANGLE)
UTILITY RAKE SUPPORT ANGLE [HW-7732]
12-14 x 1 PANCAKE HEAD SELF-DRILLER [FASTENER #12A] @ 24" O.C. (CENTER IN SLOT)
WOOD BLOCKING (NOT BY MBCI)
12-11 x 1 PANCAKE HEAD SELF-TAPPER [FASTENER #13A] (2) PER CLIP
5/8" PLYWOOD MIN. (NOT BY MBCI)
DIM.