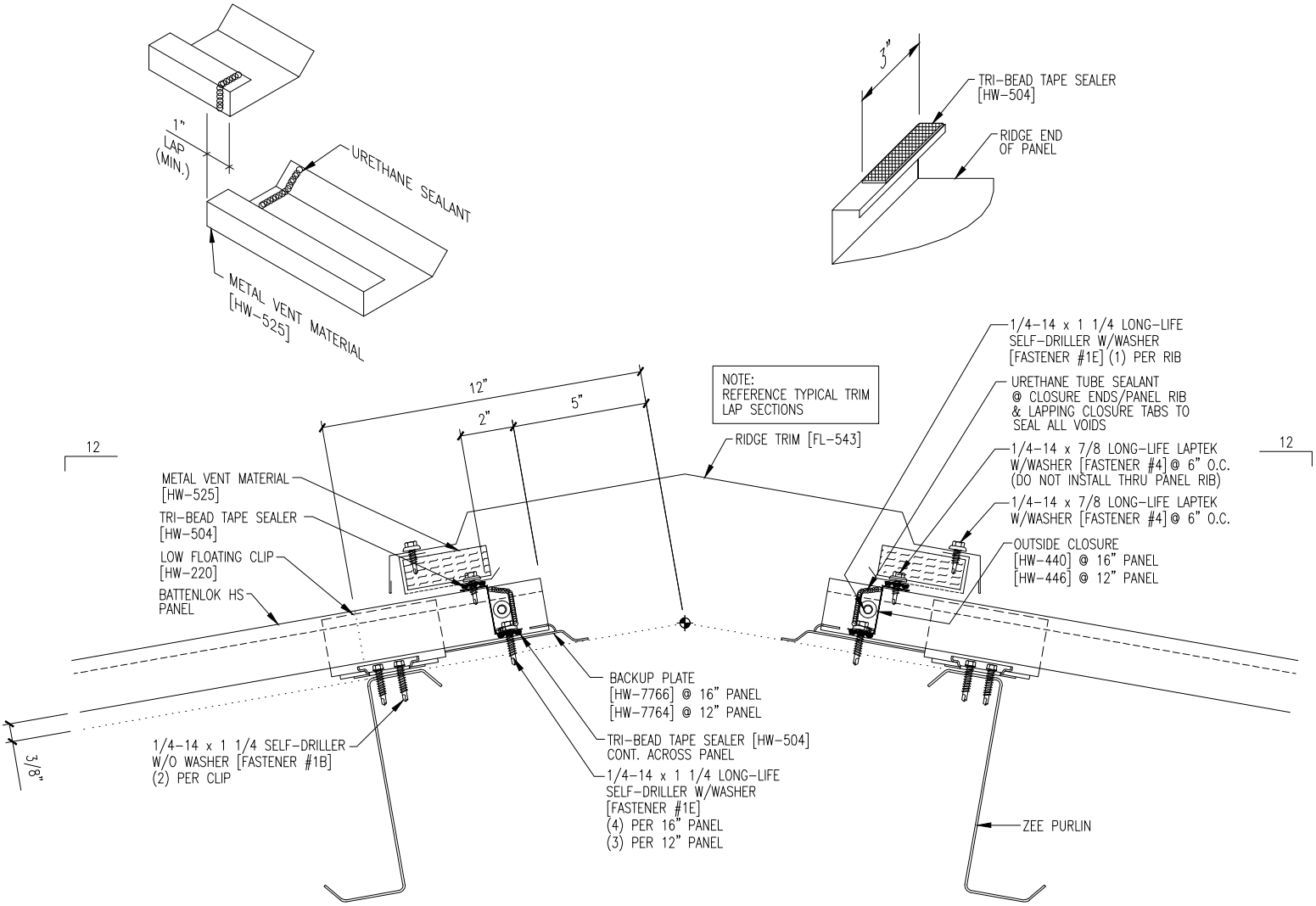
1" LAP (MIN.)
URETHANE SEALANT
METAL VENT MATERIAL [HW-525]
3"
TRI-BEAD TAPE SEALER [HW-504]
RIDGE END OF PANEL
NOTE: REFERENCE TYPICAL TRIM LAP SECTIONS
12"
2"
5"
RIDGE TRIM [FL-543]
12
12
METAL VENT MATERIAL [HW-525]
TRI-BEAD TAPE SEALER [HW-504]
LOW FLOATING CLIP [HW-220]
BATTENLOK HS PANEL
1/4-14 x 1 1/4 LONG-LIFE SELF-DRILLER W/WASHER [FASTENER #1E] (1) PER RIB
URETHANE TUBE SEALANT @ CLOSURE ENDS/PANEL RIB & LAPPING CLOSURE TABS TO SEAL ALL VOIDS
1/4-14 x 7/8 LONG-LIFE LAPTEK W/WASHER [FASTENER #4] @ 6" O.C. (DO NOT INSTALL THRU PANEL RIB)
1/4-14 x 7/8 LONG-LIFE LAPTEK W/WASHER [FASTENER #4] @ 6" O.C.
OUTSIDE CLOSURE [HW-440] @ 16" PANEL [HW-446] @ 12" PANEL
BACKUP PLATE [HW-7766] @ 16" PANEL [HW-7764] @ 12" PANEL
TRI-BEAD TAPE SEALER [HW-504] CONT. ACROSS PANEL
1/4-14 x 1 1/4 LONG-LIFE SELF-DRILLER W/WASHER [FASTENER #1E] (4) PER 16" PANEL (3) PER 12" PANEL
1/4-14 x 1 1/4 SELF-DRILLER W/O WASHER [FASTENER #1B] (2) PER CLIP
3/8"
ZEE PURLIN