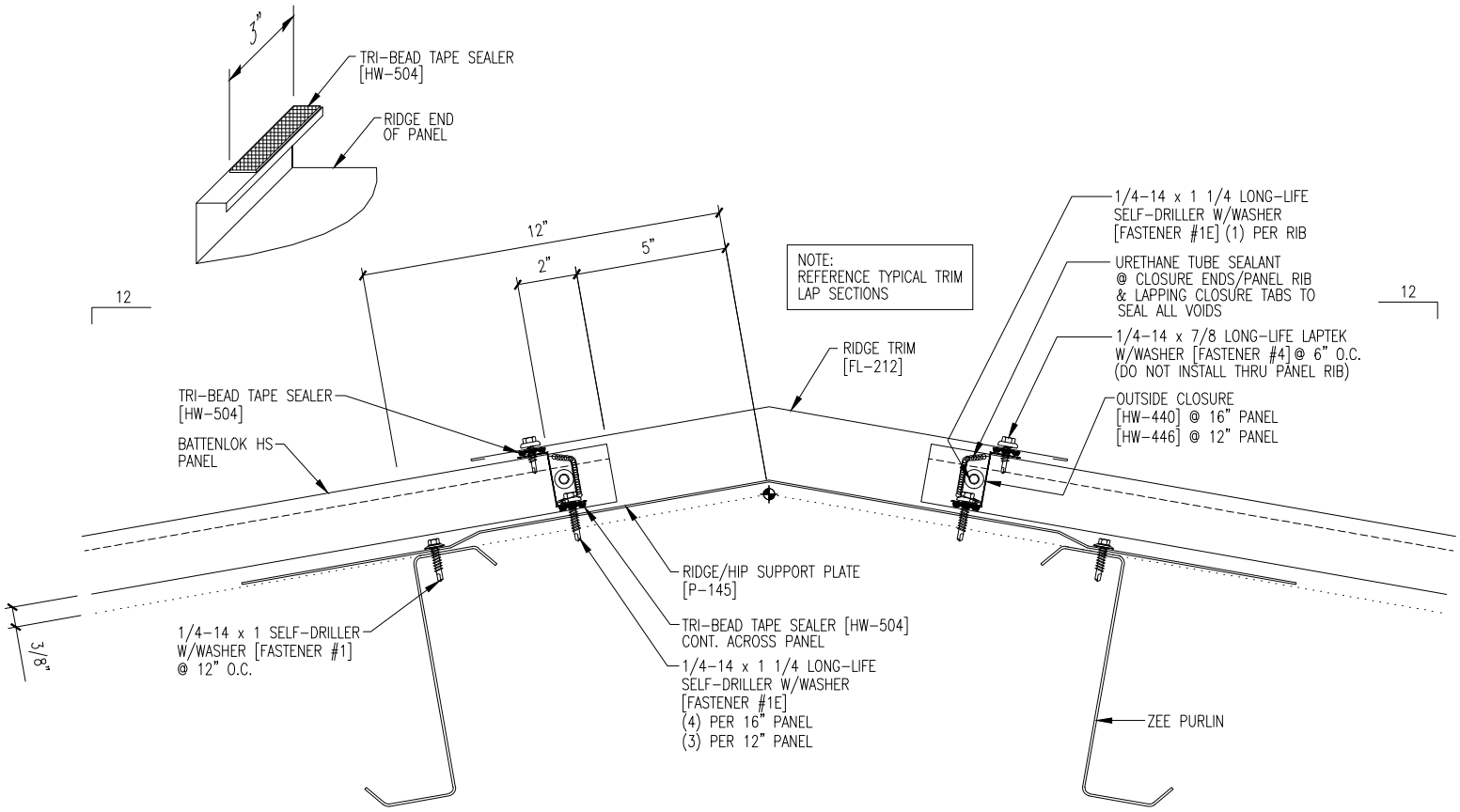
3"
TRI-BEAD TAPE SEALER [HW-504]
RIDGE END OF PANEL
12"
2"
5"
NOTE: REFERENCE TYPICAL TRIM LAP SECTIONS
12
12
1/4-14 x 1 1/4 LONG-LIFE SELF-DRILLER W/WASHER [FASTENER #1E] (1) PER RIB
URETHANE TUBE SEALANT @ CLOSURE ENDS/PANEL RIB & LAPPING CLOSURE TABS TO SEAL ALL VOIDS
1/4-14 x 7/8 LONG-LIFE LAPTEK W/WASHER [FASTENER #4] @ 6" O.C. (DO NOT INSTALL THRU PANEL RIB)
RIDGE TRIM [FL-212]
OUTSIDE CLOSURE [HW-440] @ 16" PANEL [HW-446] @ 12" PANEL
TRI-BEAD TAPE SEALER [HW-504]
BATTENLOK HS PANEL
RIDGE/HIP SUPPORT PLATE [P-145]
TRI-BEAD TAPE SEALER [HW-504] CONT. ACROSS PANEL
1/4-14 x 1 1/4 LONG-LIFE SELF-DRILLER W/WASHER [FASTENER #1E] (4) PER 16" PANEL (3) PER 12" PANEL
1/4-14 x 1 SELF-DRILLER W/WASHER [FASTENER #1] @ 12" O.C.
3/8"
ZEE PURLIN