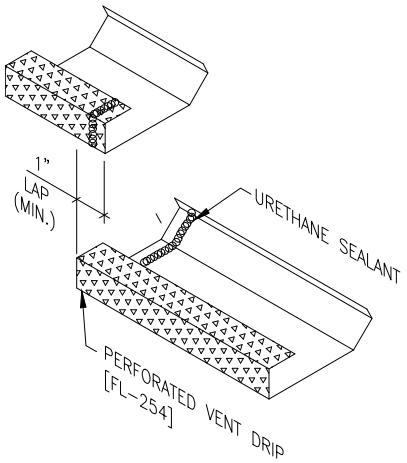

HIGH EAVE SEALANT DETAIL

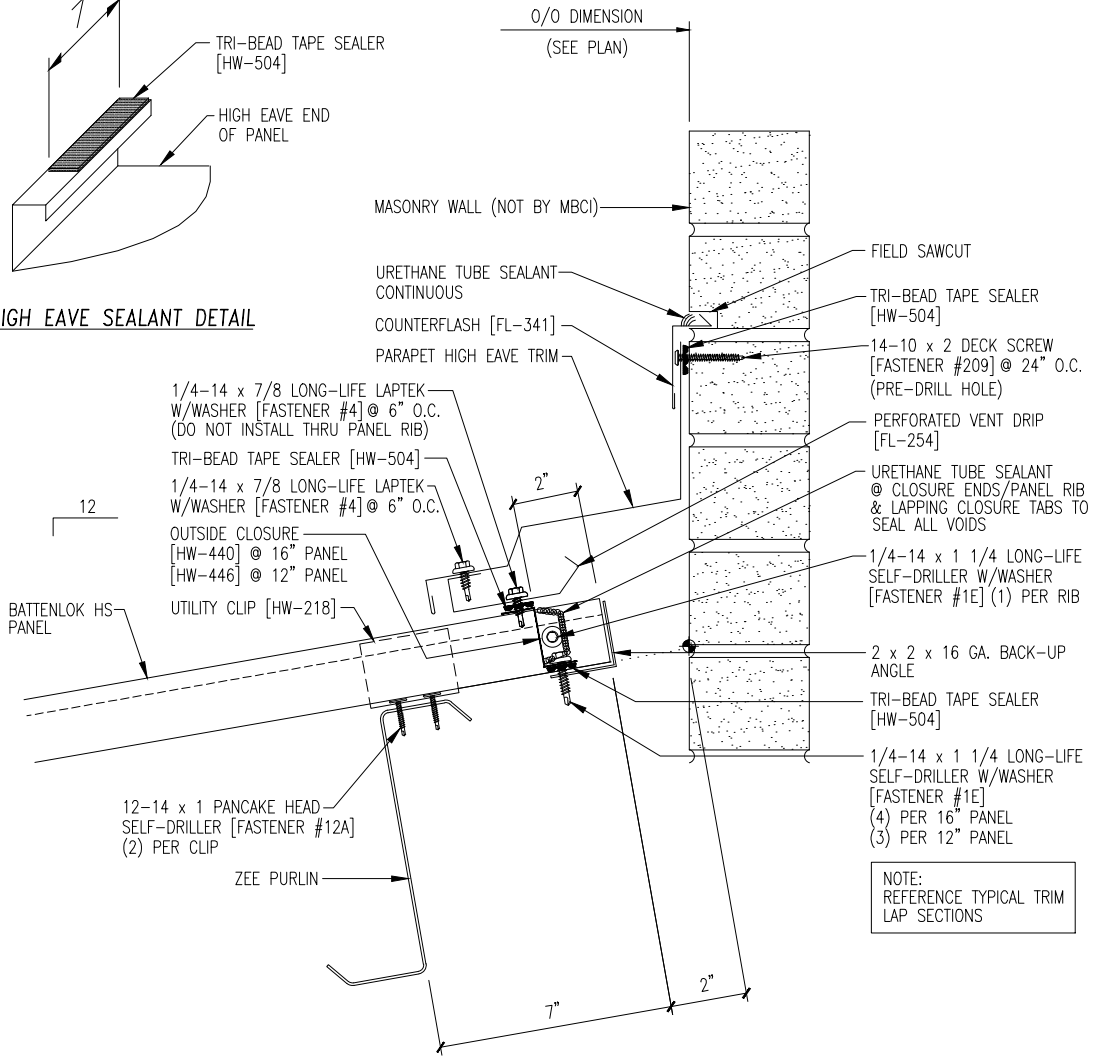

NOTE:
REFERENCE TYPICAL TRIM
LAP SECTIONS