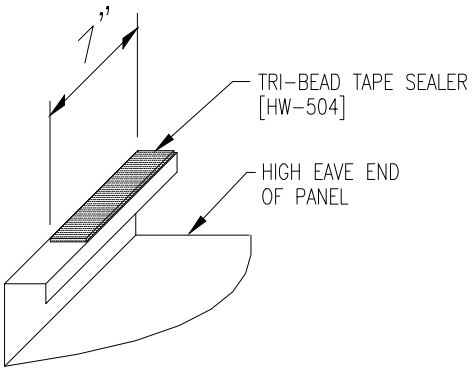

HIGH EAVE SEALANT DETAIL

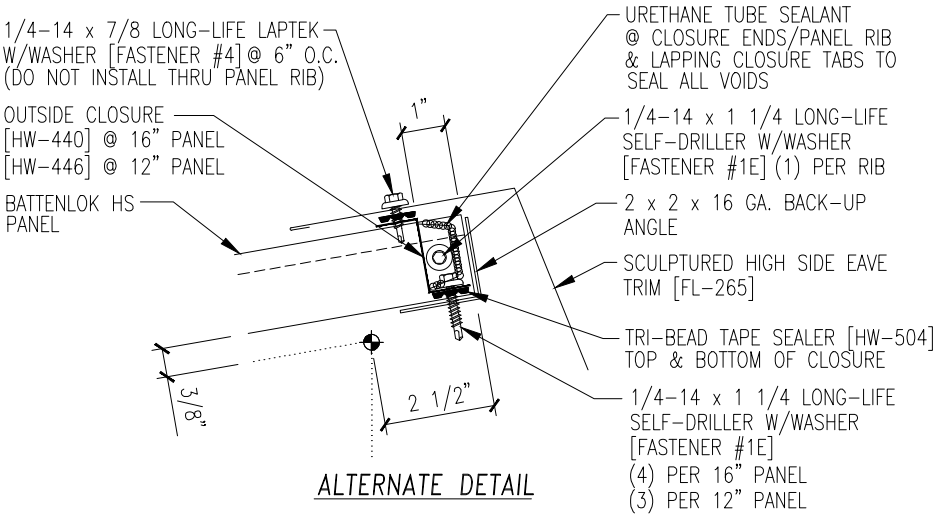
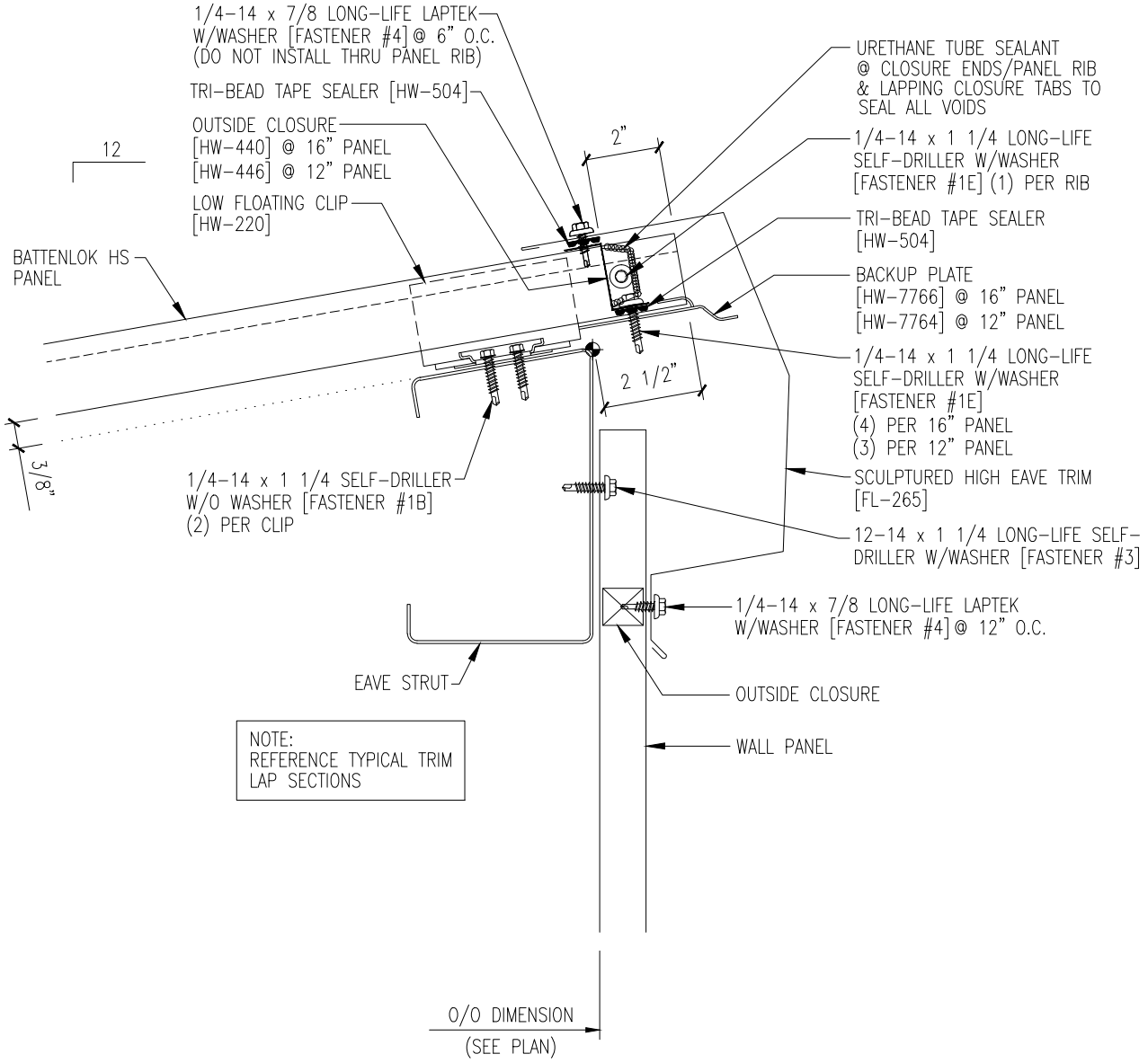
ALTERNATE DETAIL