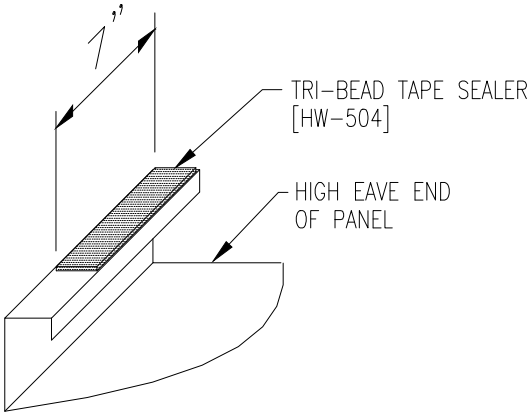
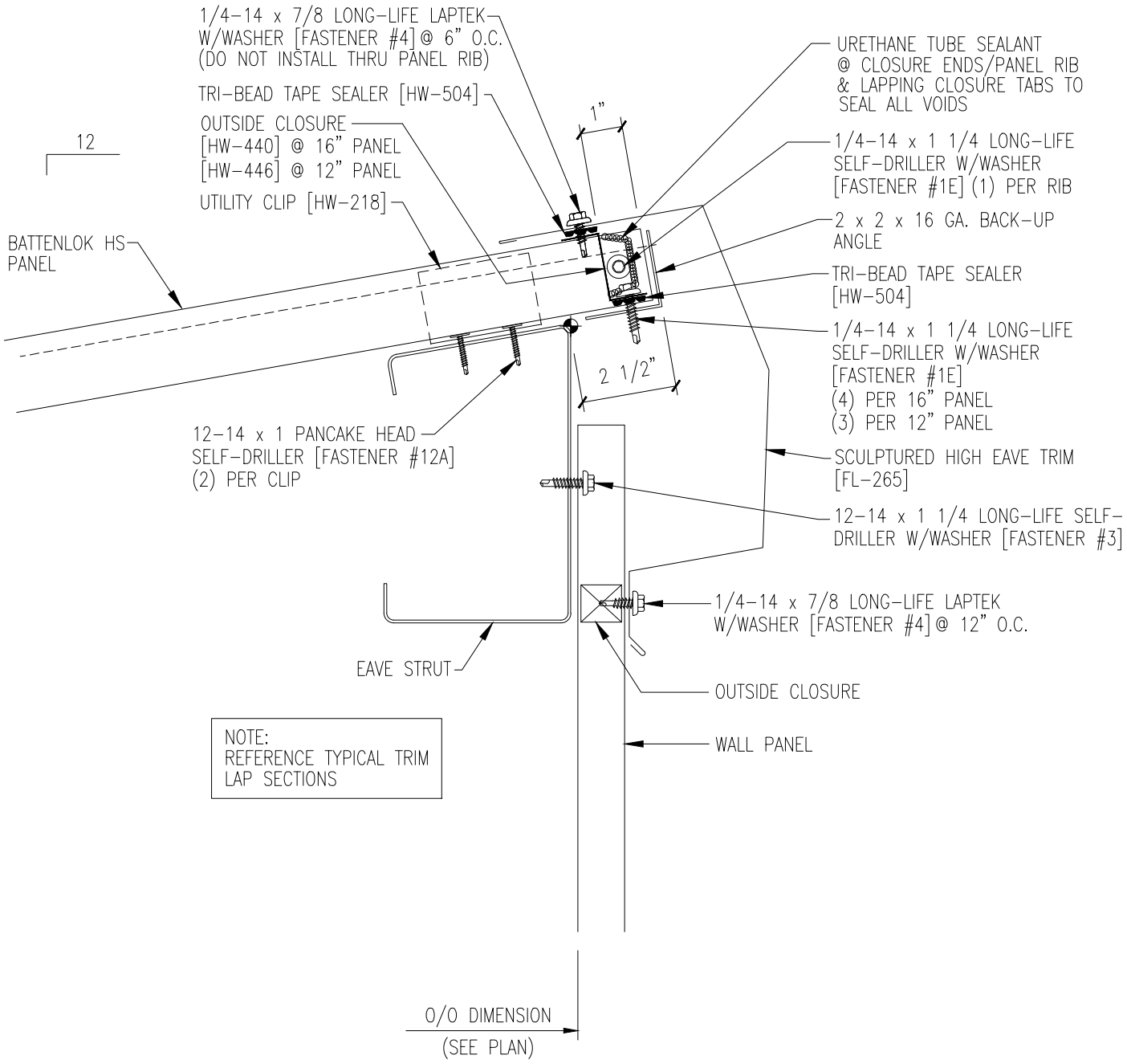
HIGH EAVE SEALANT DETAIL