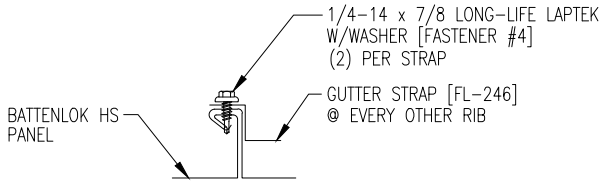

GUTTER STRAP ATTACHMENT

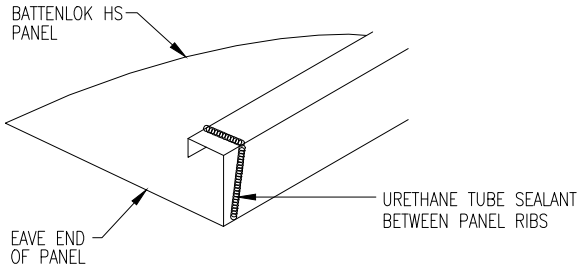

EAVE SEALANT DETAIL

URETHANE SEALANT MUST COME IN CONTACT WITH TAPE SEALER TO FORM A WEATHERTIGHT SEAL

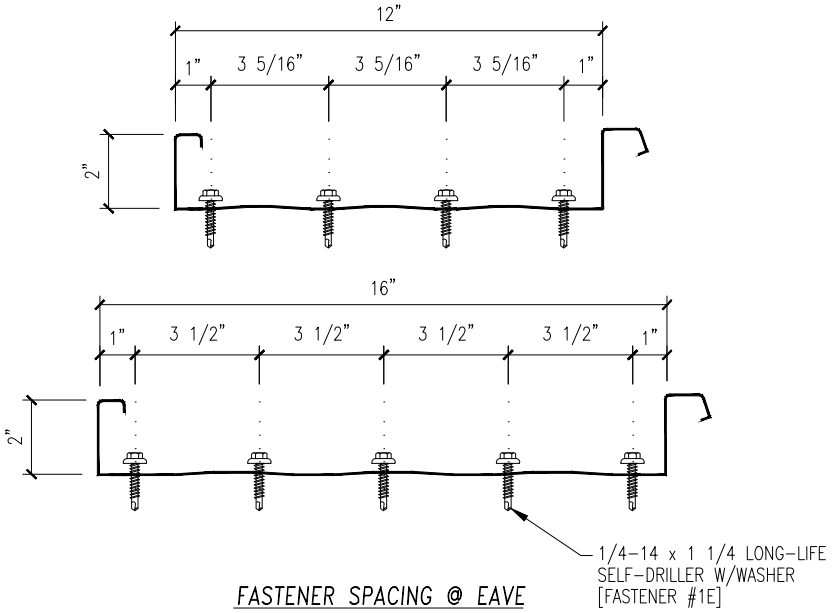
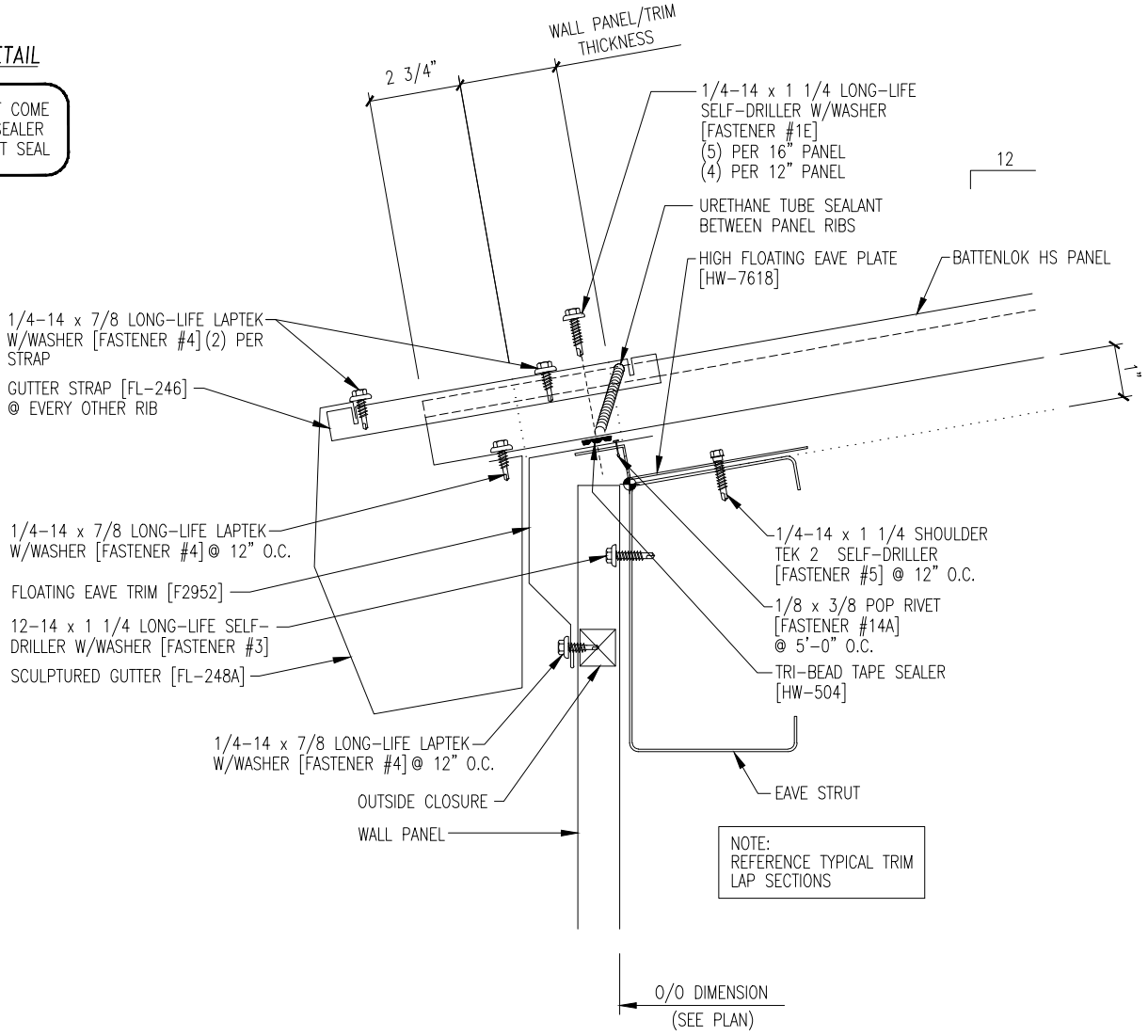
FASTENER SPACING @ EAVE