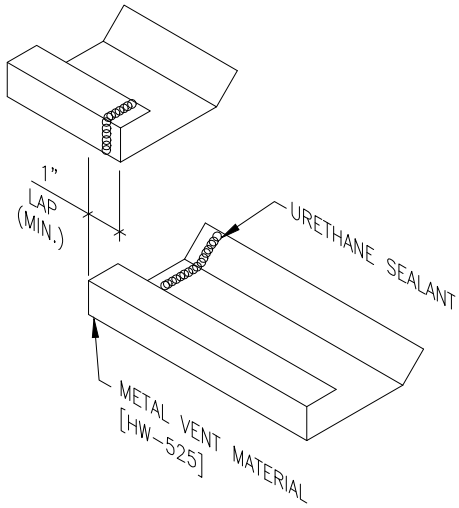
1"
LAP
(MIN.)
URETHANE SEALANT
METAL VENT MATERIAL
[HW-525]

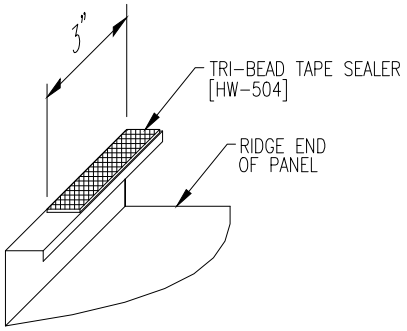
3"
TRI-BEAD TAPE SEALER
[HW-504]
RIDGE END
OF PANEL

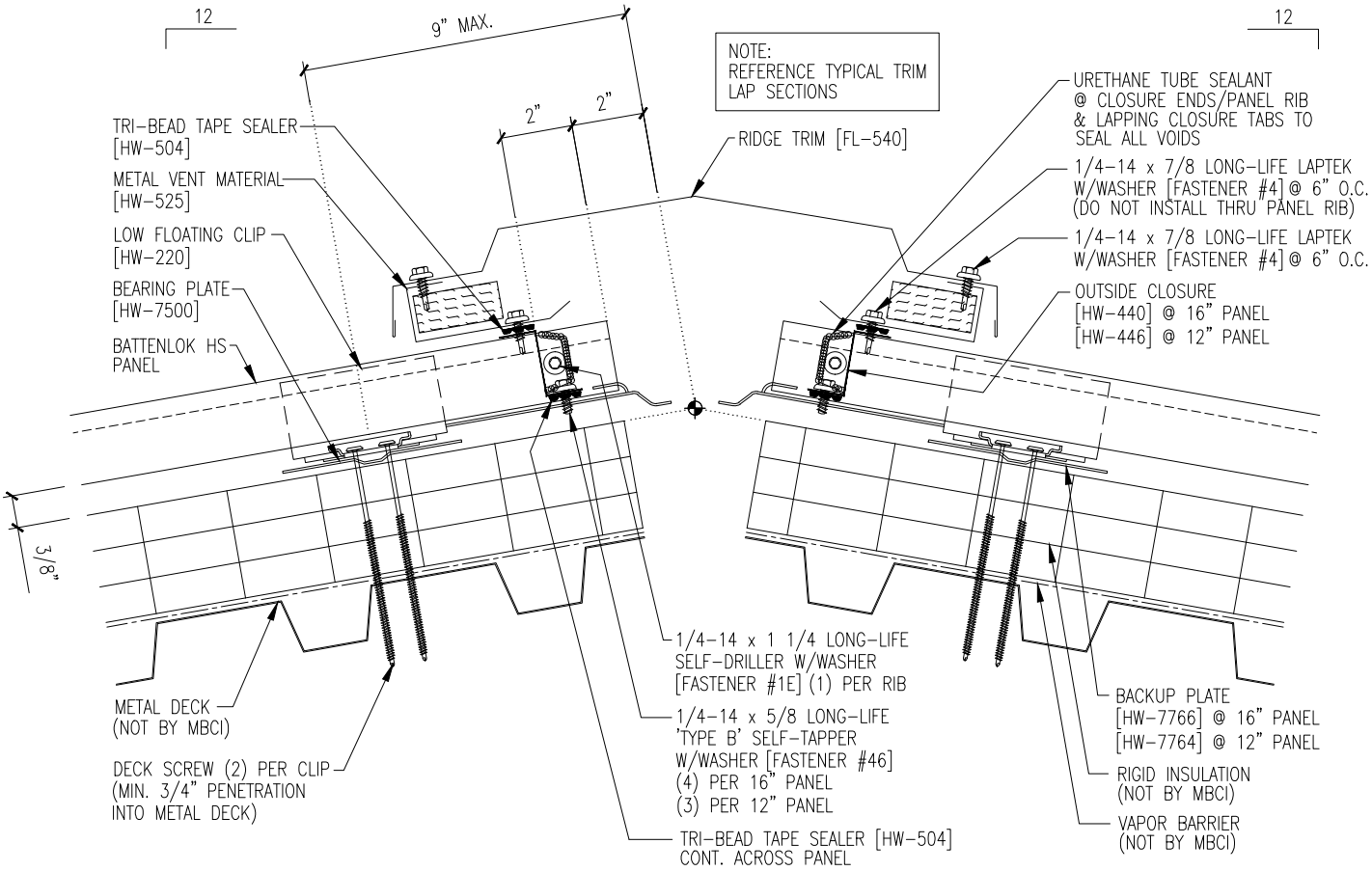
12
9" MAX.
12
NOTE:
REFERENCE TYPICAL TRIM
LAP SECTIONS
2"
2"
TRI-BEAD TAPE SEALER
[HW-504]
METAL VENT MATERIAL
[HW-525]
LOW FLOATING CLIP
[HW-220]
BEARING PLATE
[HW-7500]
BATTENLOK HS
PANEL
RIDGE TRIM [FL-540]
URETHANE TUBE SEALANT
@ CLOSURE ENDS/PANEL RIB
& LAPPING CLOSURE TABS TO
SEAL ALL VOIDS
1/4-14 x 7/8 LONG-LIFE LAPTEK
W/WASHER [FASTENER #4] @ 6" O.C.
(DO NOT INSTALL THRU PANEL RIB)
1/4-14 x 7/8 LONG-LIFE LAPTEK
W/WASHER [FASTENER #4] @ 6" O.C.
OUTSIDE CLOSURE
[HW-440] @ 16" PANEL
[HW-446] @ 12" PANEL
3/8"
1/4-14 x 1 1/4 LONG-LIFE
SELF-DRILLER W/WASHER
[FASTENER #1E] (1) PER RIB
METAL DECK
(NOT BY MBCI)
1/4-14 x 5/8 LONG-LIFE
'TYPE B' SELF-TAPPER
W/WASHER [FASTENER #46]
(4) PER 16" PANEL
(3) PER 12" PANEL
DECK SCREW (2) PER CLIP
(MIN. 3/4" PENETRATION
INTO METAL DECK)
TRI-BEAD TAPE SEALER [HW-504]
CONT. ACROSS PANEL
BACKUP PLATE
[HW-7766] @ 16" PANEL
[HW-7764] @ 12" PANEL
RIGID INSULATION
(NOT BY MBCI)
VAPOR BARRIER
(NOT BY MBCI)