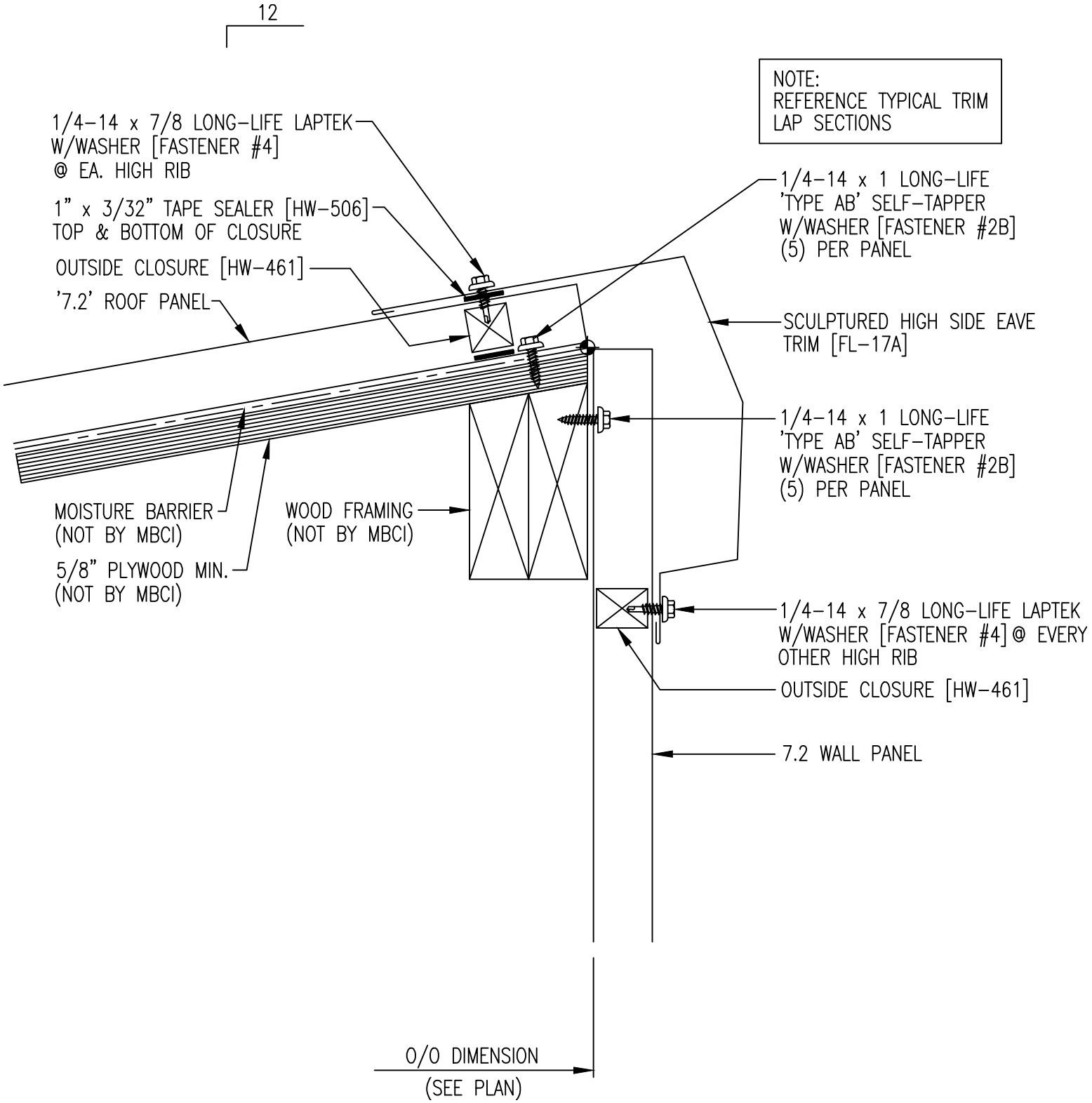
12
NOTE:
REFERENCE TYPICAL TRIM
LAP SECTIONS
1/4-14 x 7/8 LONG-LIFE LAPTEK
W/WASHER [FASTENER #4]
@ EA. HIGH RIB
1" x 3/32" TAPE SEALER [HW-506]
TOP & BOTTOM OF CLOSURE
OUTSIDE CLOSURE [HW-461]
'7.2' ROOF PANEL
1/4-14 x 1 LONG-LIFE
'TYPE AB' SELF-TAPPER
W/WASHER [FASTENER #2B]
(5) PER PANEL
SCULPTURED HIGH SIDE EAVE
TRIM [FL-17A]
1/4-14 x 1 LONG-LIFE
'TYPE AB' SELF-TAPPER
W/WASHER [FASTENER #2B]
(5) PER PANEL
MOISTURE BARRIER
(NOT BY MBCI)
WOOD FRAMING
(NOT BY MBCI)
5/8" PLYWOOD MIN.
(NOT BY MBCI)
1/4-14 x 7/8 LONG-LIFE LAPTEK
W/WASHER [FASTENER #4] @ EVERY
OTHER HIGH RIB
OUTSIDE CLOSURE [HW-461]
7.2 WALL PANEL
O/O DIMENSION
(SEE PLAN)