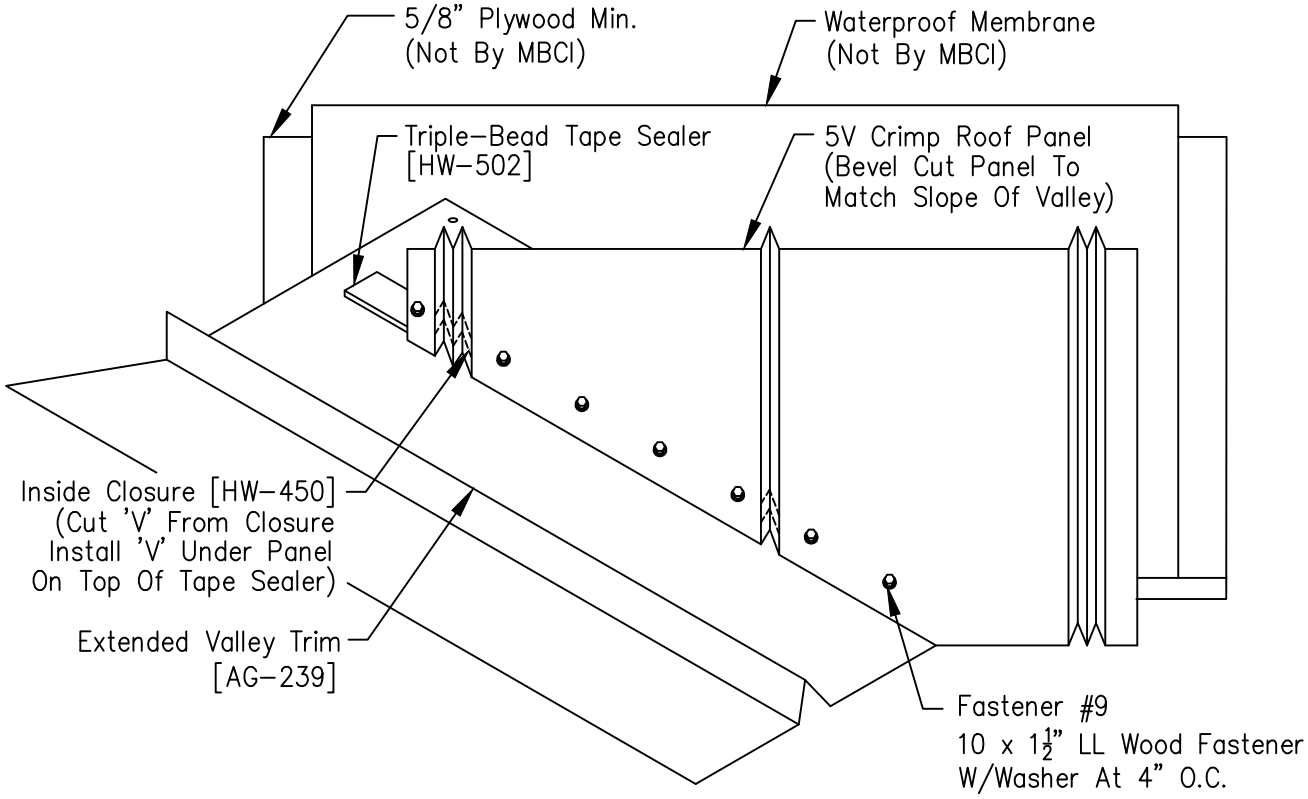
5/8" Plywood Min.
(Not By MBCI)
Waterproof Membrane
(Not By MBCI)
Triple-Bead Tape Sealer
[HW-502]
5V Crimp Roof Panel
(Bevel Cut Panel To
Match Slope Of Valley)
Inside Closure [HW-450]
(Cut 'V' From Closure
Install 'V' Under Panel
On Top Of Tape Sealer)
Extended Valley Trim
[AG-239]
Fastener #9
10 x 1½" LL Wood Fastener
W/Washer At 4" O.C.

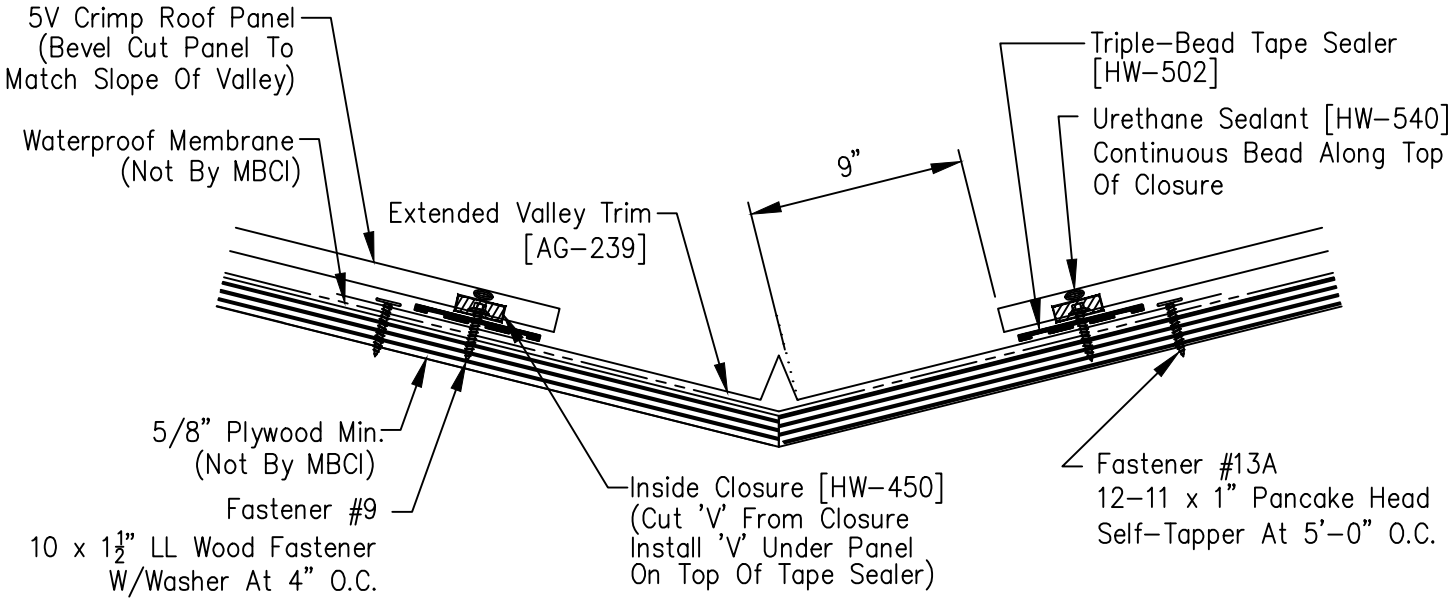
5V Crimp Roof Panel
(Bevel Cut Panel To
Match Slope Of Valley)
Waterproof Membrane
(Not By MBCI)
Extended Valley Trim
[AG-239]
9"
Triple-Bead Tape Sealer
[HW-502]
Urethane Sealant [HW-540]
Continuous Bead Along Top
Of Closure
5/8" Plywood Min.
(Not By MBCI)
Fastener #9
10 x 1½" LL Wood Fastener
W/Washer At 4" O.C.
Inside Closure [HW-450]
(Cut 'V' From Closure
Install 'V' Under Panel
On Top Of Tape Sealer)
Fastener #13A
12-11 x 1" Pancake Head
Self-Tapper At 5'-0" O.C.