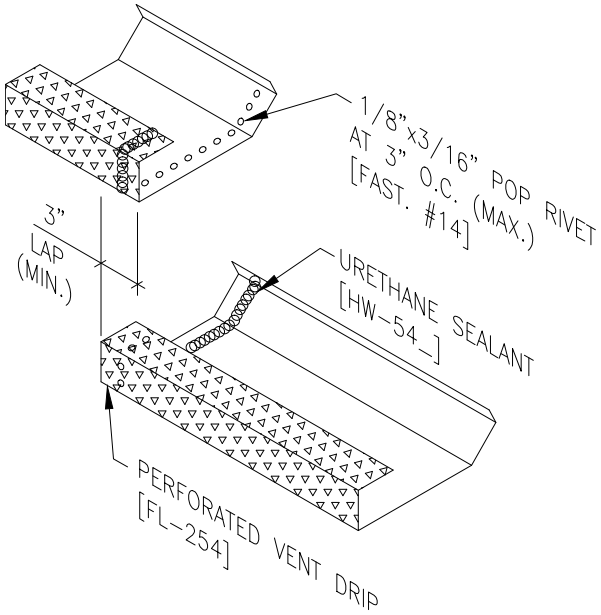

12
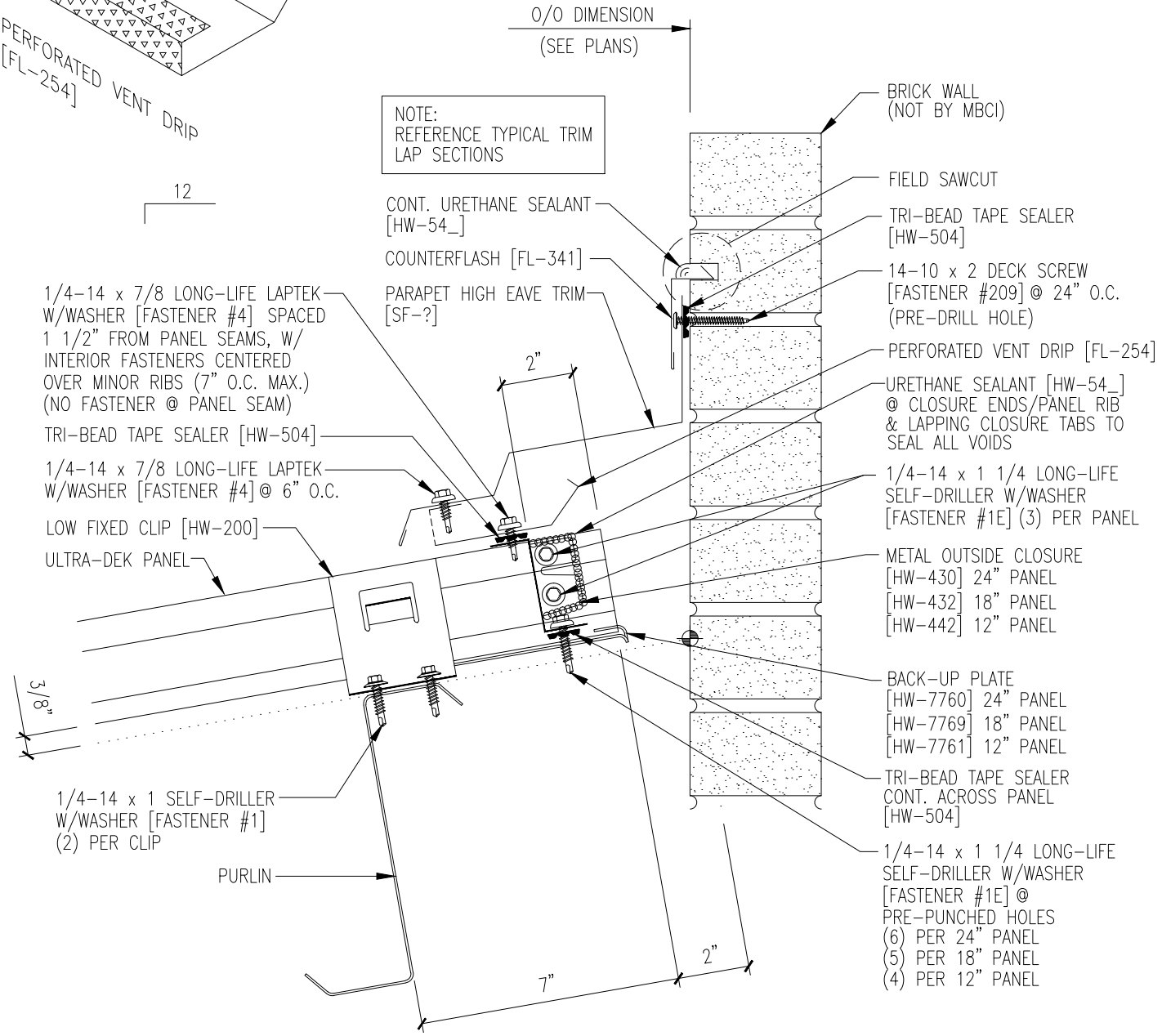
NOTE:
REFERENCE TYPICAL TRIM
LAP SECTIONS