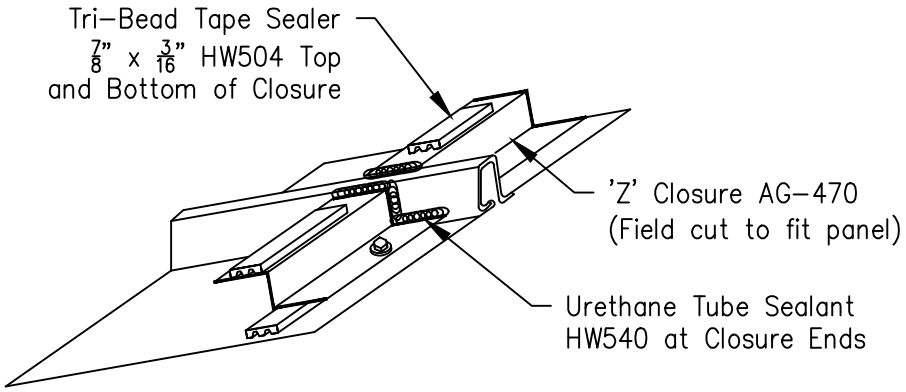
Tri–Bead Tape Sealer
7/8" x 3/16" HW504 Top
and Bottom of Closure
'Z' Closure AG–470
(Field cut to fit panel)
Urethane Tube Sealant
HW540 at Closure Ends

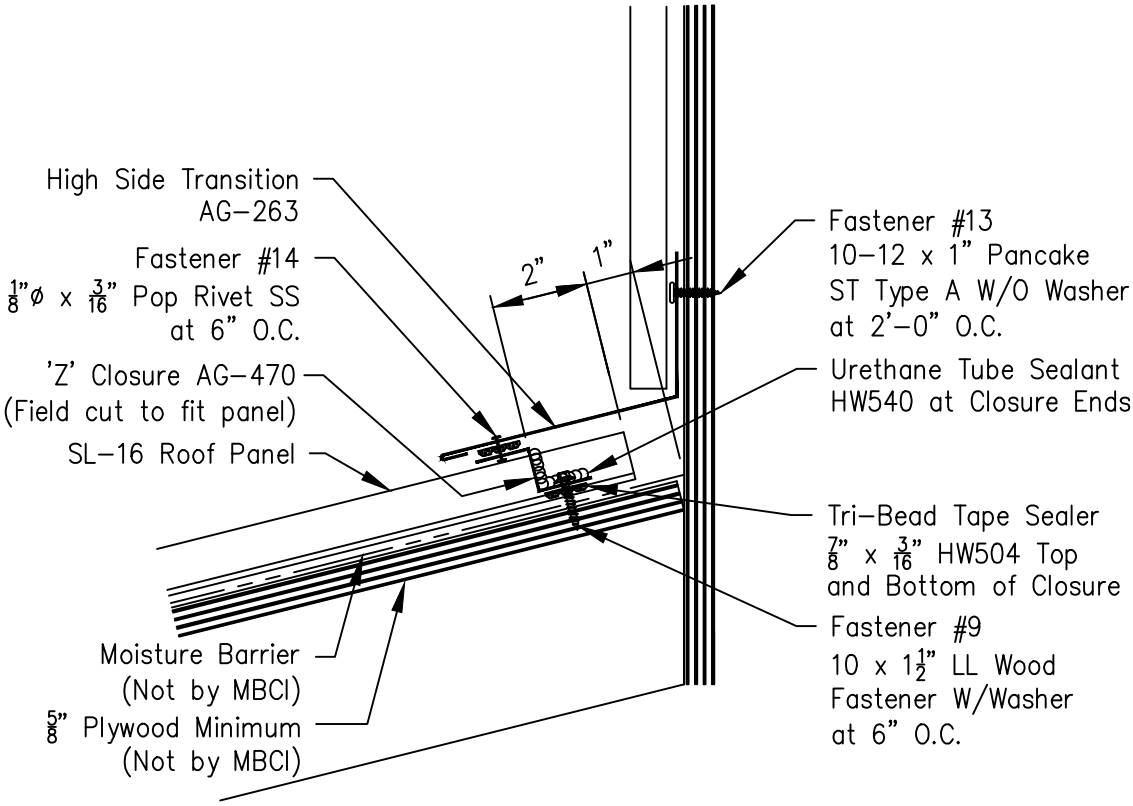
High Side Transition
AG–263
Fastener #14
1/8"Ø x 3/16" Pop Rivet SS
at 6" O.C.
'Z' Closure AG–470
(Field cut to fit panel)
SL–16 Roof Panel
Moisture Barrier
(Not by MBCI)
5/8" Plywood Minimum
(Not by MBCI)
2"
1"
Fastener #13
10–12 x 1" Pancake
ST Type A W/O Washer
at 2'–0" O.C.
Urethane Tube Sealant
HW540 at Closure Ends
Tri–Bead Tape Sealer
7/8" x 3/16" HW504 Top
and Bottom of Closure
Fastener #9
10 x 1 1/2" LL Wood
Fastener W/Washer
at 6" O.C.