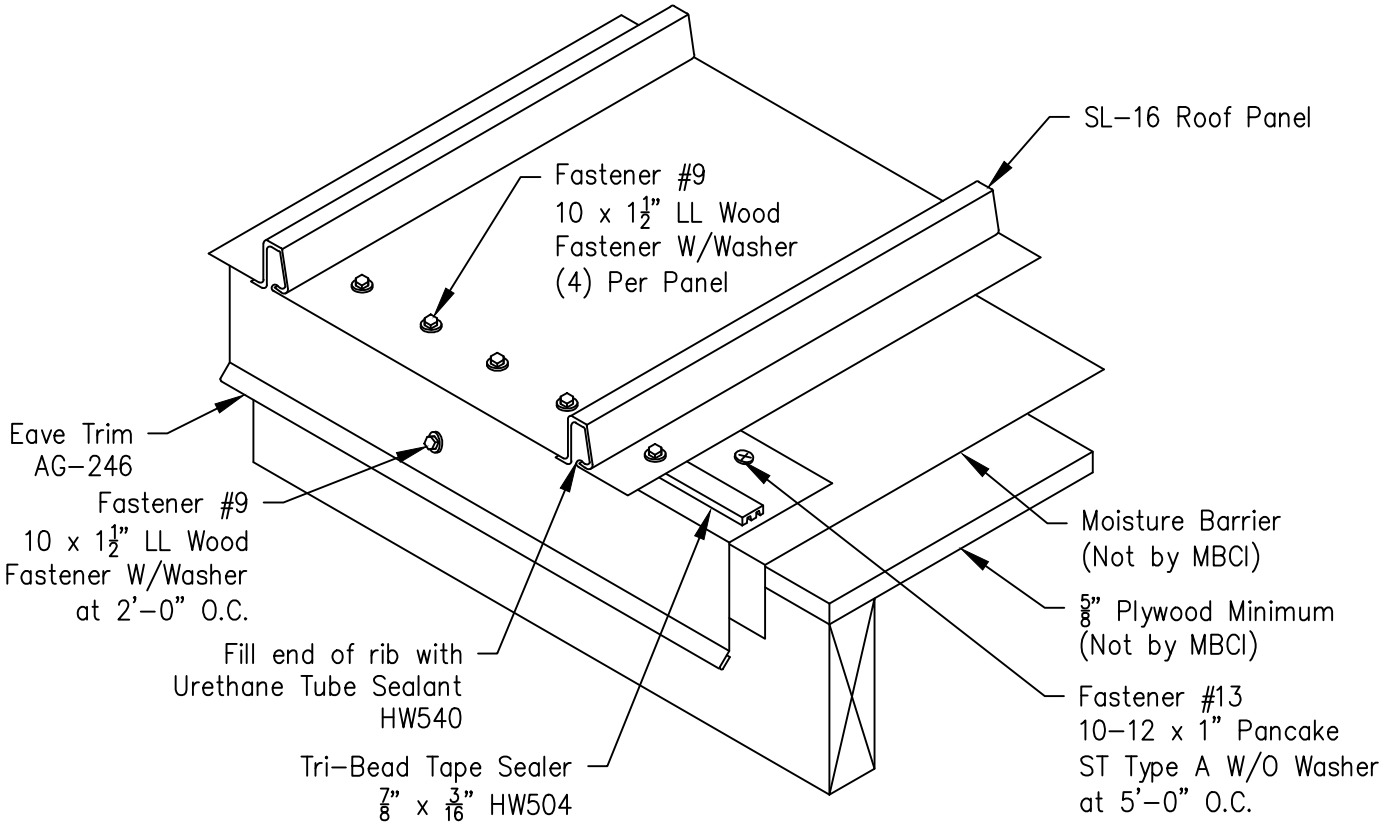
SL–16 Roof Panel
Fastener #9
10 x 1½" LL Wood
Fastener W/Washer
(4) Per Panel
Eave Trim
AG–246
Fastener #9
10 x 1½" LL Wood
Fastener W/Washer
at 2'–0" O.C.
Fill end of rib with
Urethane Tube Sealant
HW540
Tri–Bead Tape Sealer
⅞" x 3/16" HW504
Moisture Barrier
(Not by MBCI)
⅝" Plywood Minimum
(Not by MBCI)
Fastener #13
10–12 x 1" Pancake
ST Type A W/O Washer
at 5'–0" O.C.

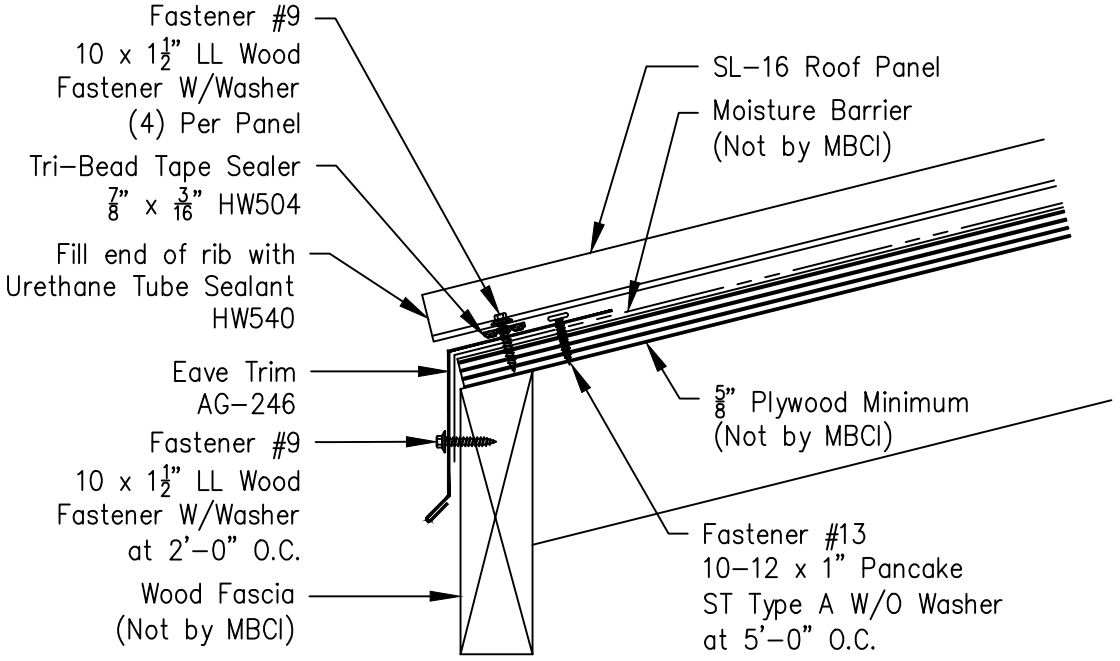
Fastener #9
10 x 1½" LL Wood
Fastener W/Washer
(4) Per Panel
Tri–Bead Tape Sealer
⅞" x 3/16" HW504
Fill end of rib with
Urethane Tube Sealant
HW540
Eave Trim
AG–246
Fastener #9
10 x 1½" LL Wood
Fastener W/Washer
at 2'–0" O.C.
Wood Fascia
(Not by MBCI)
SL–16 Roof Panel
Moisture Barrier
(Not by MBCI)
⅝" Plywood Minimum
(Not by MBCI)
Fastener #13
10–12 x 1" Pancake
ST Type A W/O Washer
at 5'–0" O.C.