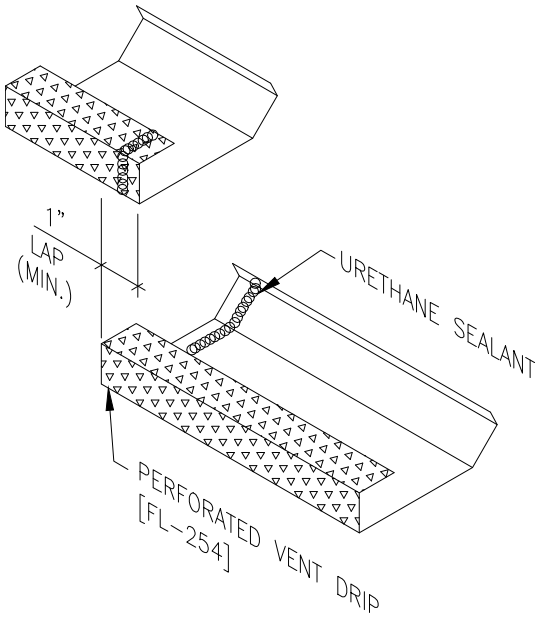
1"
LAP
(MIN.)
URETHANE SEALANT
PERFORATED VENT DRIP
[FL-254]

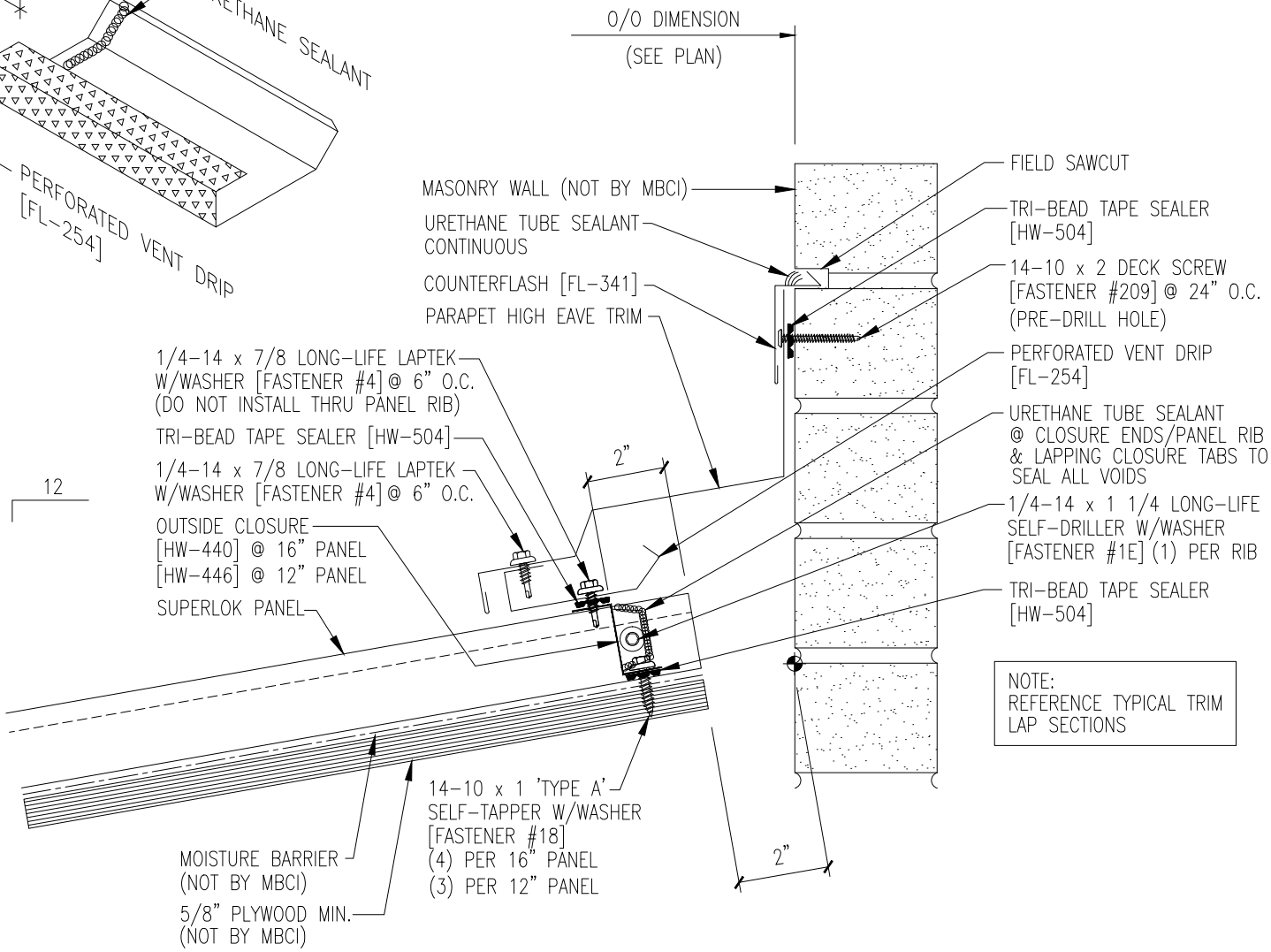
O/O DIMENSION
(SEE PLAN)
MASONRY WALL (NOT BY MBCI)
URETHANE TUBE SEALANT
CONTINUOUS
COUNTERFLASH [FL-341]
PARAPET HIGH EAVE TRIM
1/4-14 x 7/8 LONG-LIFE LAPTEK
W/WASHER [FASTENER #4] @ 6" O.C.
(DO NOT INSTALL THRU PANEL RIB)
TRI-BEAD TAPE SEALER [HW-504]
1/4-14 x 7/8 LONG-LIFE LAPTEK
W/WASHER [FASTENER #4] @ 6" O.C.
12
OUTSIDE CLOSURE
[HW-440] @ 16" PANEL
[HW-446] @ 12" PANEL
SUPERLOK PANEL
2"
FIELD SAWCUT
TRI-BEAD TAPE SEALER
[HW-504]
14-10 x 2 DECK SCREW
[FASTENER #209] @ 24" O.C.
(PRE-DRILL HOLE)
PERFORATED VENT DRIP
[FL-254]
URETHANE TUBE SEALANT
@ CLOSURE ENDS/PANEL RIB
& LAPPING CLOSURE TABS TO
SEAL ALL VOIDS
1/4-14 x 1 1/4 LONG-LIFE
SELF-DRILLER W/WASHER
[FASTENER #1E] (1) PER RIB
TRI-BEAD TAPE SEALER
[HW-504]
NOTE:
REFERENCE TYPICAL TRIM
LAP SECTIONS
14-10 x 1 'TYPE A'
SELF-TAPPER W/WASHER
[FASTENER #18]
(4) PER 16" PANEL
(3) PER 12" PANEL
MOISTURE BARRIER
(NOT BY MBCI)
5/8" PLYWOOD MIN.
(NOT BY MBCI)
2"